Operating Instructions

TPS 320i C

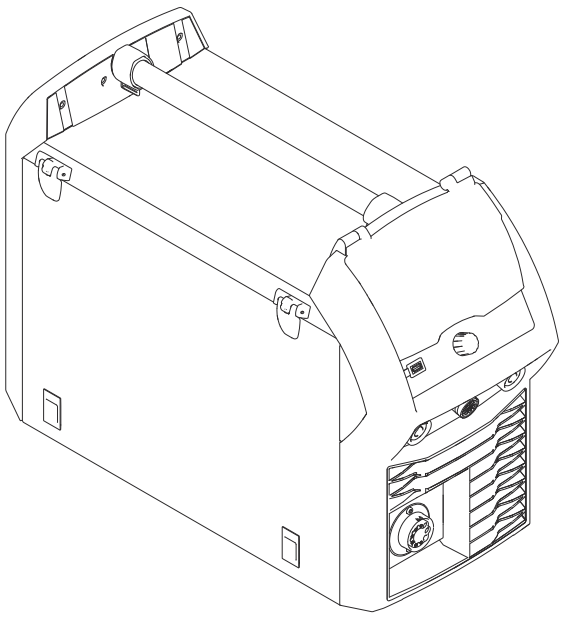

EN | Operating Instructions

42,0426,0113,EN 048-20082026

Contents

General information **11**

General 13
Explanation of warnings and safety instructions 13
Obligations of the operator 13
Obligations of personnel 13
Safety symbols 14
Data security 14
Copyright 14
Proper use 15
Intended use 15
Foreseeable misuse 15
Information about the device 16
Device concept 16
Power source = welding machine 16
How it works 16
Application areas 16
Conformities 17
Bluetooth trademarks 18
Notices on the device 19
Warning notices on the device 19
Description of the warning notices on the device 21
System components 23
General 23
Overview 23
Options 23

Welding packages, welding characteristics and welding processes **27**

Welding packages 29
General 29
Welding packages 29
Welding characteristics 30
Welding characteristics 30
Welding processes and process functions 35
MIG/MAG pulse synergic welding 35
MIG/MAG standard synergic welding 35
PMC process 35
LSC process 35
SynchroPulse welding 36
CMT process 36
CMT Cycle Step welding process 36
SlagHammer 36
Stitch welding 37
ConstantWire 37

Controls, connections and mechanical components **39**

Control panel 41
General 41
Danger from incorrect operation 41
Control panel 42
Input options 43
Display and status line 44
Display 44
Status bar 45
Status bar – Current limit reached 48
Switching to full screen 48
Next page - Previous page 50

Animated graphics 51
Greyed out parameters 52
Connections, switches and mechanical components 53
TPS 320i C welding machine 53

Before installation and commissioning 55

Minimum equipment needed for welding task 57
General 57
MIG/MAG gas-cooled welding 57
MIG/MAG water-cooled welding 57
Manual CMT welding 57
TIG DC welding 57
Manual metal arc welding 57
Before installation and commissioning 58
Danger from incorrect operation 58
Generator-powered operation 58
Information on system components 58
Connecting the mains cable 60
General 60
Stipulated mains cables 60
Mains cable connection safety 60
Connecting the mains cable - general 61
Transport and setup regulations 63
Transporting individual devices 63
Transporting welding systems 64
Checking lifting tackle 64
Setup regulations 64
Mains connection 66
Mains connection 66

Dangers during welding 67

Danger from incorrect operation or misuse 69
Danger from incorrect operation and misuse 69
Danger from mains current and welding current 70
Danger from mains current and welding current 70
Danger from electromagnetic emissions 71
Danger from flying sparks, arc radiation and noise 72
Danger from flying sparks 72
Danger from arc radiation 72
Danger due to noise 72
Data on noise emission values 73
Danger from welding operation 73
Danger from toxic gases and vapours 74
Danger from toxic gases and vapours 74
Danger due to missing safety devices and moving components 75
Danger due to missing safety devices 75
Danger from rotating parts 75
Danger due to missing covers 75
Danger from shielding gas cylinders and shielding gas supply 76
Danger from shielding gas cylinders and shielding gas supply 76
Danger from hot parts and slag 77
Danger from hot parts and slag 77

Start-up 79

Commissioning the TPS 320i C 81
Danger from electric current 81
General 81
Recommendation for water-cooled applications 81
Connecting the gas cylinder 81
Establishing a ground earth connection 82
Connecting the welding torch 83

Inserting/replacing feed rollers ... 85
Inserting the wirespool ... 86
Inserting the basket-type spool ... 87
Feed in the wire electrode ... 88
Setting the contact pressure ... 90
Adjusting the brake ... 90
Design of the D300 brake ... 91
Performing R/L alignment ... 91
Locking and unlocking the welding machine using the NFC key ... 92
General ... 92
Locking and unlocking the welding machine using the NFC key ... 92

Welding **95**

MIG/MAG modes ... 97
General ... 97
Symbols and their explanations ... 97
2-step mode ... 98
4-step mode ... 98
Special 4-step mode ... 99
Special 2-step mode ... 99
Spot welding ... 100
MIG/MAG and CMT welding ... 101
Danger from incorrect operation and electric current ... 101
MIG/MAG and CMT welding – overview ... 101
Switching on the welding machine ... 101
Setting the welding process and operating mode via the status bar ... 102
Setting the welding process and operating mode via the menu bar ... 103
Selecting the filler metal and shielding gas ... 104
Setting the welding parameters ... 105
Set the shielding gas flow rate ... 107
MIG/MAG or CMT welding ... 107
Spot and stitch welding ... 109
Spot welding ... 109
Stitch welding ... 110
MIG/MAG and CMT welding parameters ... 113
Welding parameters for MIG/MAG pulse synergic welding and PMC welding ... 113
Welding parameters for MIG/MAG standard synergic welding, LSC welding and CMT welding ... 114
Welding parameters for MIG/MAG standard manual welding ... 115
Explanation of footnotes ... 116
EasyJob mode ... 117
General ... 117
Activating EasyJob mode ... 117
Storing EasyJob operating points ... 118
Retrieving EasyJob operating points ... 118
Deleting EasyJob operating points ... 119
Loading more EasyJobs ... 119
Job mode ... 121
General ... 121
Storing settings as a job ... 121
Job welding - retrieving a job ... 122
Renaming a job ... 123
Deleting a job ... 124
Loading a job ... 125
Optimising a job ... 126
Setting correction limits for a job ... 127
Pre-settings for "Save as Job" ... 129
TIG welding ... 131
Danger from incorrect operation and electric current ... 131
Preparations ... 131
TIG welding ... 132

Igniting the arc 134
Finishing welding 134
MMA welding 135
Danger from incorrect operation and electric current 135
Preparations 135
MMA welding 136
Welding parameters for manual metal arc welding 138

Process parameters 139

Overview 141
Overview 141
Process parameters, General 142
Common process parameters 142
Common process parameters 143
Process parameters for start of welding/end of welding 144
Process parameters for Gas-Setup 146
Process parameters for process control 147
Penetration stabilizer 148
Arc length stabilizer 150
Combination of penetration stabilizer and arc length stabilizer 152
Process parameters for VELO 153
Process parameters for SynchroPulse 153
Process parameters for process mix 156
Process parameters for process control additive welding 159
Process parameters for CMT Cycle Step 160
Process parameters for spot welding 160
Process parameters for interval 160
Process parameters for manual setup 161
R/L-check / alignment 161
Process parameters for TIG / electrode setup 162
Components and monitoring process parameters 166
Process parameters - Components and monitoring 166
Process parameters for components 166
System adjust 168
Arc break monitoring 168
Wire stick contact tip 169
Wire stick work piece 169
Welding circuit coupling 170
Wire end monitoring 170
Gas monitoring 172
Motor force monitoring 173
Wire buffer monitoring 173
Process parameters, Job 174
Overview – Process parameters, Job 174
Optimising job process parameters 174
Process parameters for correction limits 177
Process parameters for "Save as Job" pre-settings 177

Defaults 181

Defaults 183
General 183
Overview 183
Defaults - view 184
Defaults view 184
Setting the language 184
Setting units / standards 184
Setting the time and date 185
Retrieving system data 186
Displaying characteristics 188
MIG/MAG parameter display 188
JobMaster MIG/MAG display 189

Defaults - System 191
Defaults - System 191
Retrieving device information 191
Restore factory settings 192
Restoring the website password 192
Mode Setup: Setting the special 4-step "Guntrigger", special display for JobMaster, spot welding and torch trigger job selection 193
Service Connect 195
Network settings 195
Setting network parameters manually 195
WLAN 197
Bluetooth settings 198
WeldCube Air 200
Client authorization 201
USB port 201
Welding machine configuration 201
Wire feeder setup 202
Defaults - Documentation 203
Defaults - Documentation 203
Setting the sampling rate 203
Viewing the logbook 203
Activating/deactivating limit value monitoring 204
Defaults - Administration 205
Defaults - Administration 205
General 205
Explanation of terms used 205
Pre-defined roles and users 206
User management overview 206
Administrator and creating roles 207
Recommendation for creating roles and users 207
Creating an administrator key 208
Creating roles 208
Copy roles 209
Creating a user 210
Creating a user 210
Copying users 210
Editing roles / users, deactivating user management 212
Editing roles 212
Deleting roles 212
Editing users 212
Deleting users 213
Deactivating user management 213
Lost NFC administrator key? 214
CENTRUM - Central User Management 215
Activating the CENTRUM server 215

SmartManager - the welding machine website 217

SmartManager - the welding machine website 219
General 219
Opening and logging into the welding machine SmartManager 219
Help function, should you be unable to log in 220
Changing password / logging off 221
Settings 221
Language selection 221
Status indicator 222
Fronius 223
Current system data 224
Current system data 224
Documentation, logbook 226
Logbook 226
Basic settings 227

Job-Data ... 228
Job data ... 228
Job overview ... 228
Editing a job ... 228
Importing a job ... 229
Exporting a job ... 229
Exporting job(s) as... ... 229
Welding machine settings ... 231
Process parameters ... 231
Name & location ... 231
Parameter display ... 231
Date & time ... 231
Network settings ... 231
MQTT settings ... 231
OPC UA settings ... 232
Backup & Restore ... 233
General remarks ... 233
Backup & Restore ... 233
Automatic backup ... 234
User management ... 235
General ... 235
Users ... 235
User roles ... 235
Export & import ... 236
CENTRUM server ... 236
Overview ... 237
Overview ... 237
Expanding / reducing all groups ... 237
Export component overview as 237
Update ... 238
Update ... 238
Searching for an update file (performing the update) ... 238
Information on open source licensing ... 239
Fronius WeldConnect ... 239
Function Packages ... 240
Function Packages ... 240
Installing a function package ... 240
Synergic lines overview ... 241
Characteristics overview ... 241
Show filter ... 241
Screenshot ... 242
Screenshot ... 242

Troubleshooting and maintenance **243**

Troubleshooting ... 245
General ... 245
Danger from electrical current and inadequate ground conductor connection ... 245
MIG/MAG welding - current limit ... 245
Troubleshooting the welding machine ... 246
Care, maintenance and disposal ... 250
General ... 250
Safety - maintenance ... 250
Original spare/wearing parts ... 250
At every start-up ... 250
Every 2 months ... 251
Every 6 months ... 251
Safety inspection ... 251
Updating firmware ... 252
Disposal ... 252

Appendix **253**

Average consumption values ... 255
Average wire electrode consumption during MIG/MAG welding ... 255
Average shielding gas consumption during MIG/MAG welding ... 255
Average shielding gas consumption during TIG welding ... 255
Technical data ... 256
Explanation of the term "duty cycle" ... 256
Special voltages ... 256
Overview with critical raw materials, year of production of the device ... 257
Environmental conditions ... 257
TPS 320i C ... 258
TPS 320i C /nc ... 260
TPS 320i C /S/nc ... 262
TPS 320i C /MV/nc ... 264
Radio parameters ... 266

General information

General

Explanation of warnings and safety instructions

Warnings are intended to warn people of possible injury and to prevent personal injury and damage to the product. They relate to individual actions performed with and on the product.

⚠ DANGER!

Indicates an immediately dangerous situation.
Serious injury or death will result if the hazard is not avoided.
▶ Action step to escape the situation.

⚠ WARNING!

Indicates a potentially dangerous situation.
Serious injury or death will potentially result if the hazard is not avoided.
▶ Action step to escape the situation.

⚠ CAUTION!

Indicates a potentially dangerous situation.
Minor or moderate injury may result if the hazard is not avoided.
▶ Action step to escape the situation.

NOTE!

Indicates a situation which may result in damage to property.
Failure to avoid the situation may result in impaired work results and material damage to the product or other property.
▶ Action step to avoid the situation.

Safety instructions are intended to ensure safe use of the product. They are preventive and help to inform users about basic risks when using the product. They do not refer specifically to individual actions performed with and on the product.

Obligations of the operator

The operator must only allow persons to work with the device who:
- are familiar with the fundamental instructions regarding safety at work and accident prevention and have been instructed in how to use the device
- have read and understood these operating instructions, especially the section "safety rules", and have confirmed as much with their signatures
- are trained to produce the required results.

Checks must be carried out at regular intervals to ensure that operators are working in a safety-conscious manner.

Obligations of personnel

Before using the device, all persons instructed to do so must:
- observe the basic instructions regarding safety at work and accident prevention; and
- read these operating instructions (especially the "Safety rules" section) and sign to confirm that they have understood them and will follow them.

Before leaving the workplace, ensure that people or property cannot come to any harm in your absence.

Safety symbols

Devices with the CE mark meet the requirements of all valid EU directives, such as:
- Directive 2014/30/EU on Electromagnetic Compatibility
- Directive 2014/35/EU Low Voltage Directive
- Directive 2014/53/EU Radio Equipment Directive
- EN IEC 60974 Arc welding equipment
- And so on

The full text of the EU Declaration of Conformity can be found at https://www.fronius.com .

Devices with the CSA mark satisfy the requirements of the relevant standards in Canada and the USA.

Data security

With regard to data security, the user is responsible for:
- backing up any changes made to the factory settings
- saving and retaining personal settings

Copyright

Copyright of this document remains with Fronius International GmbH.

Text, illustrations and other media correspond to the technical state of the art at the time of publication. Fronius reserves the right to make changes. If you have any suggestions for improvement, or can point out any inconsistencies in this document, we will be most grateful for your comments.

Proper use

Intended use

The device has been manufactured in line with the state of the art and according to recognised safety standards.

The welding machine may only be used for MIG/MAG, MMA and TIG welding in combination with Fronius components.

Any use above and beyond this purpose shall be deemed to be not in accordance with the intended use.

Intended use also includes:
- Fully reading and understanding these operating instructions
- Following all safety instructions
- Performing all stipulated inspection and maintenance work

Foreseeable misuse

IMPORTANT! Utilisation for any other purpose, or in any other manner, shall be deemed to be improper use.

Prohibited improper use includes:
- Using the device to thaw pipes
- Using the device to charge batteries/rechargeable batteries
- Using the device to start engines
- Operation or storage of the device outside the environmental conditions specified in the technical data
- Operation or storage of the device outside the protection class specified in the technical data
- ...

Information about the device

Device concept

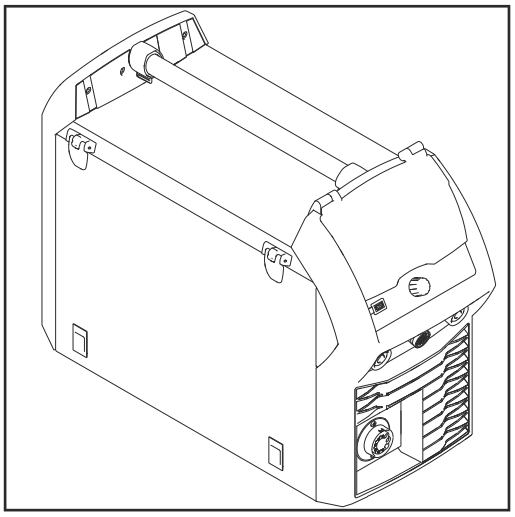

The TPS 320i C MIG/MAG welding machine is a completely digitised, microprocessor-controlled inverter welding machine with integrated 4-roller wire drive.

A modular design and potential for system add-ons ensure a high degree of flexibility.
There is no longer an interconnecting hosepack between the welding machine and the wirefeeder. Its compact design makes the TPS 320i C particularly suitable for mobile applications.

The welding machine can be adapted to any specific situation.

Power source = welding machine

Depending on the device firmware, in some cases "power source" may still be shown on the display.

Power source = welding machine

How it works

The central control and regulation unit of the welding machines is coupled with a digital signal processor. The central control and regulation unit and the signal processor control the entire welding process.
During the welding process, the actual data is measured continuously and the device responds immediately to any changes. Rule algorithms ensure that the desired target state is maintained.

This results in:
- A precise welding process
- Exact reproducibility of all results
- Excellent weld properties

Application areas

The devices are used in workshops and industry for manual and automated applications with classical steel, galvanised sheets, chrome/nickel and aluminium.

The integral 4-roller wire drive, high performance and light weight of the TPS 320i C welding machine makes it the ideal choice for portable applications on building sites or in repair workshops.

Conformities

FCC
This equipment complies with the limit values for a digital device of EMC emission class A pursuant to Part 15 of the FCC Rules. These limit values are intended to provide an adequate level of protection against harmful emissions when the device is being used in an industrial environment. This device generates and uses high-frequency energy and can cause interference to radio communications if it is not installed and used according to the Operating Instructions.
The use of this device in residential areas will probably cause harmful interference, in which case the user will be obliged to correct the interference at their own expense.

FCC ID: QKWMCU3

Industry Canada RSS
This device complies with the Industry Canada licence-exempt RSS standards. Its use is subject to the following conditions:

(1) The device must not cause any harmful interference.
(2) The device must be able to cope with any interference, including that which could adversely affect its operation.

IC: 12270A-MCU3

EU
Conformity with Directive 2014/53 / EU – Radio Equipment Directive (RED)

When installing the antennae to be used for this transmitter, it is essential to maintain a minimum distance of 20 cm from all people. They must not be set up or operated together with another antenna or another transmitter. To comply with exposure to radio frequency guidelines, the operating conditions of the transmitter must be available to OEM integrators and end users.

ANATEL / Brazil
This device is operated on a secondary basis. It has no protection against harmful interference, even from devices of the same type.
This device cannot cause interference in systems operated on a primary basis.
This device complies with ANATEL's specific absorption rate limit values in relation to exposure to high-frequency electric, magnetic and electromagnetic fields.

IFETEL / Mexico
Operation of this device is subject to the following two conditions:

(1) The device must not cause any harmful interference.
(2) This device must accept any interference received, including interference that may cause undesired operation.

IFETEL: FRFR4326-001338

NCC / Taiwan
In accordance with NCC regulations for low-power radio frequency devices:

Article 12
A certified low-power radio frequency device must not change the frequency, increase the power or alter the characteristics and functions of the original structure without approval.

Article 14
The use of low-power radio frequency devices must not adversely affect flight safety and communications.
A detected malfunction must be deactivated and corrected immediately until

no malfunction is present.
The notice in the preceding paragraph refers to radio communications operated in accordance with the provisions of the Telecommunications Act. Low-power radio frequency devices must withstand interference from legitimate communications or radiological, electrical radio frequency devices for industrial, scientific and medical applications.

Thailand



Bluetooth trademarks

The Bluetooth® word mark and logos are registered trademarks owned by Bluetooth SIG, Inc. and any use of such marks by Fronius International GmbH is under license. Other trademarks and trade names are those of their respective owners.

Notices on the device

Warning notices on the device

Warning notices and safety symbols are affixed to welding machines with the CSA test mark for use in North America (USA and Canada). These warning notices and safety symbols must not be removed or painted over. They warn against incorrect operation, as this may result in serious injury and damage.

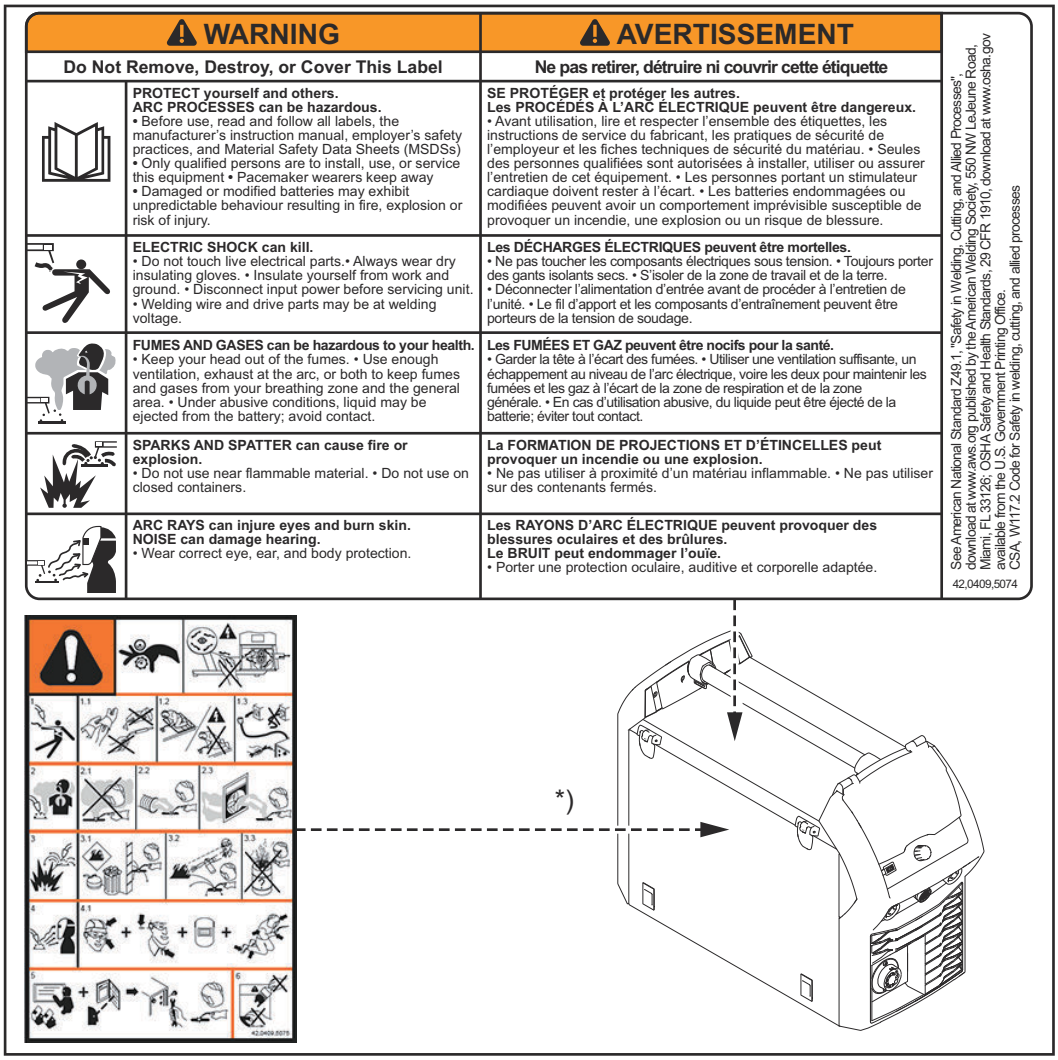

*) on the inside of the device

Safety symbols on the rating plate:



Welding is dangerous. The following basic requirements must be met:

- Welders must be sufficiently qualified
- Suitable protective equipment must be used
- All persons not involved in the welding process must be kept at a safe distance



Do not use the functions described here until you have fully read and understood the following documents:

- These operating instructions
- All the operating instructions for the system components, especially the safety rules

Description of the warning notices on the device

For certain device versions, warning notices are affixed to the device.

The arrangement of the symbols may vary.

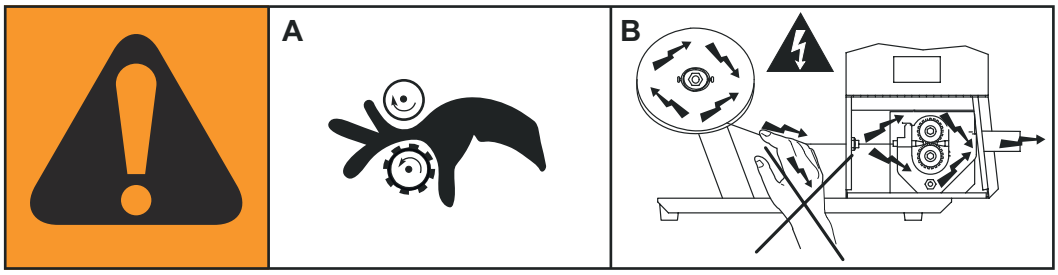

!	**Warning! Attention!** **The symbols represent possible dangers.**
A	Feed rollers can injure fingers.
B	The welding wire and drive parts are live during operation. Keep hands and metal objects away!

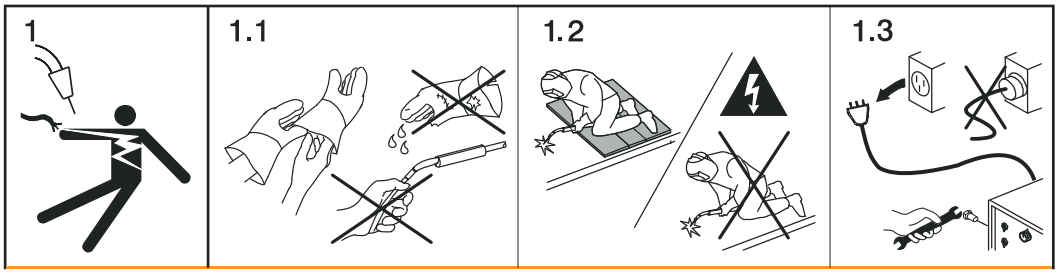

1.	An electric shock can be fatal.
1.1	Wear dry, insulating gloves. Do not touch the wire electrode with bare hands. Do not wear wet or damaged gloves.
1.2	Use a base that is insulated from the floor and work area to protect against electric shock.
1.3	Before working on the device, switch off the device and pull out the mains plug or disconnect it from the power supply.

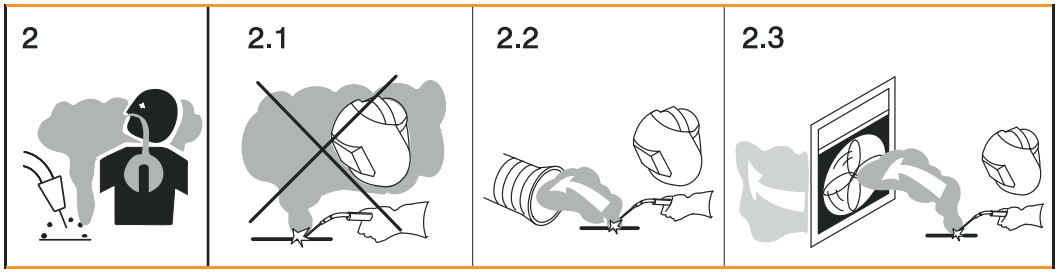

2.	Inhalation of welding fumes can be harmful to health.
2.1	Keep your face away from any welding fumes.
2.2	Use forced-air ventilation or a local extraction system to remove welding fumes.
2.3	Remove welding fumes with a fan.

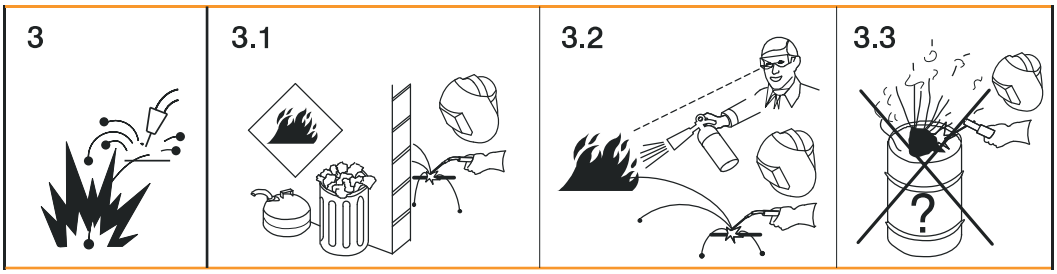

3	Welding sparks can cause an explosion or fire.
3.1	Keep flammable materials away from the welding process. Never weld close to flammable materials**.**
3.2	Welding sparks can cause a fire. Have fire extinguishers to hand. If necessary, have a supervisor ready who can operate the fire extinguisher.
3.3	Do not weld on drums or closed containers.

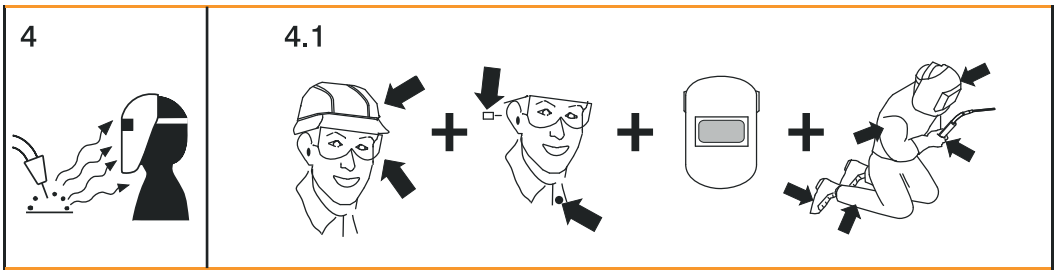

4.	Arc rays can burn the eyes and injure the skin.
4.1	Wear headgear and protective goggles. Use ear protection and wear a shirt collar with button. Use a welding helmet with the correct tinting. Wear suitable protective clothing over the entire body.

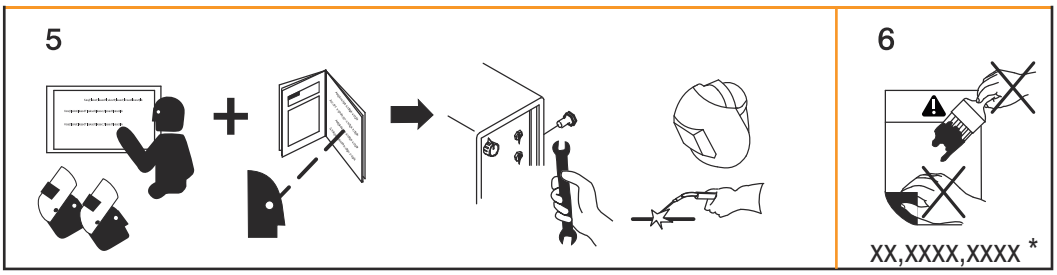

5.	Before working on the system or welding: undertake training on the device and read the instructions!
6.	Do not remove or paint over the warning sticker.
*	Manufacturer order number of the sticker

System components

General

The welding machines can be operated with various system components and options. This makes it possible to optimise procedures and to simplify machine handling and operation, depending on the field of application for the welding machine.

Overview

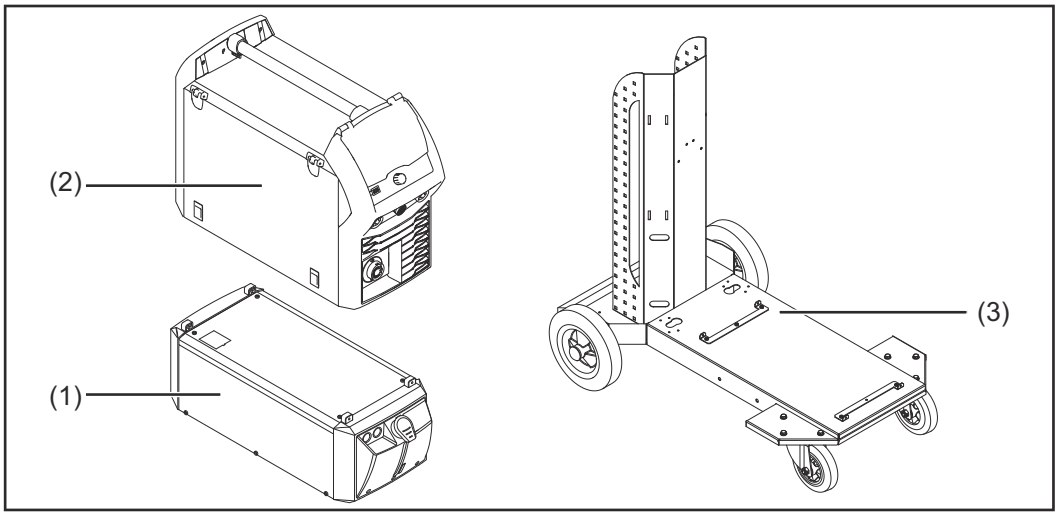

(1) Cooling units
(2) Welding machines
(3) Trolleys and gas cylinder holders

Also:
- Welding torches
- Grounding cable and electrode cable
- Dust filter
- Additional current sockets

Options

OPT/i gas flow rate sensor
OPT/i gas pressure sensor
OPT/i TPS 320i C CMT
OPT/i TPS 320i C TIG TMC
OPT/i TPS 320i C wire end
OPT/i TPS 320i C PushPull
OPT/i TPS C wire feed
OPT/i TPS C polarity reverser
OPT/i TPS C QC DFS AD10
OPT/i TPS C QC DFS Powerliner
OPT/i TPS VRD

OPT/i Ext. sensor connector

OPT/i TPS 320i C viewing window

OPT/i TPS C Ext.Welding Release
Option for external welding release

OPT/i TPS C Ethernet

OPT/i TPS C SpeedNet Connector
Optional second SpeedNet connection socket

Factory-fitted on the rear of the welding machine.

OPT/i TPS dust filter

IMPORTANT! Use of the OPT/i TPS dust filter option reduces the duty cycle.

OPT/i TPS C 2. plus socket
Optional second (+) current socket on the rear of the welding machine

OPT/i TPS C 2. ground socket
Optional second (-) current socket on the rear of the welding machine

OPT/i ground socket PC front
Optional (-) current socket (Power Connector) on the front of the welding machine - is fitted instead of the standard current socket with bayonet latch.

OPT/i Synergic Lines
Option for enabling all special characteristics available on TPSi welding machines;
this also automatically enables special characteristics created in future.

OPT/i GUN Trigger
Option for special functions in conjunction with the torch trigger

OPT/i Jobs
Option to view, create, edit, delete, export and import jobs in SmartManager
For details, see from page 228.

OPT/i Documentation
Option for the documentation function

OPT/i WebJobEdit
Option for editing jobs via the SmartManager of the welding machine

OPT/i Limit Monitoring
Option for specifying the limit values for the welding current, welding voltage and wire speed

OPT/i Custom NFC - ISO 14443A
Option to use a customer-specific frequency band for key cards

OPT/i CMT Cycle Step
Option for an adjustable, cyclical CMT welding process

OPT/i OPC-UA
Standardised data interface protocol

OPT/i MQTT
Standardised data interface protocol

OPT/i SynchroPulse 10 Hz
To increase the SynchroPulse frequency from 3 Hz to 10 Hz

OPT/i WeldCube Navigator
Software for creating digital instructions for manual welding processes to be followed by welders.
The welder is guided through the welding instructions by WeldCube Navigator.

Welding packages, welding characteristics and welding processes

Welding packages

General

Various Welding Packages, welding characteristics and welding processes are available with welding machines that enable a wide range of materials to be effectively welded.

Welding packages

The following welding packages are available for TPSi welding machine:

Standard Welding Package
4,066,012
(enables MIG/MAG standard synergic welding)

Pulse Welding Package
4,066,013
(enables MIG/MAG pulse synergic welding)

LSC Welding Package *
4,066,014
(enables the LSC process)

PMC Welding Package **
4,066,015
(enables the PMC process)

CMT Welding Package ***
4,066,016
(enables the CMT process)

ConstantWire Welding Package
4,066,019
(enables constant current or constant voltage operation during brazing)

* Only in conjunction with the Standard Welding Package
** Only in conjunction with the Pulse Welding Package
*** Only in conjunction with the Standard Welding Package and the Pulse Welding Package

IMPORTANT! A TPSi welding machine without welding packages only offers the following welding processes:
- MIG/MAG standard manual welding
- TIG welding
- Manual metal arc welding

Welding characteristics

Welding characteristics

Depending on the welding process and shielding gas mix, various process-optimised welding characteristics are available when selecting the filler metal.

Examples of welding characteristics:
- MIG/MAG 3700 PMC Steel 1,0mm M21 - arc blow *
- MIG/MAG 3450 PMC Steel 1,0mm M21 - dynamic *
- MIG/MAG 3044 Pulse AlMg5 1.2 mm I1 - universal *
- MIG/MAG 2684 Standard Steel 0.9 mm M22 - root *

The additional designation (*) next to the welding process provides information about the special properties and use of the welding characteristic.
The description of the characteristics is set out as follows:

Designation
Process
Properties

---

additive
CMT

Characteristics with reduced heat input and greater stability at a higher deposition rate for welding bead onto bead in adaptive structures

---

arc blow
PMC

Characteristic to avoid arc breaks due to arc blow.

---

arcing
Standard

Characteristics for a special type of hardfacing on a wet or dry surface
(e.g. grinding rollers in the sugar and ethanol industries)

---

base
Standard

Characteristics for a special type of hardfacing on a wet or dry surface
(e.g. grinding rollers in the sugar and ethanol industries)

---

braze
CMT, LSC, PMC

Characteristic for brazing processes (reliable wetting and good flow of braze material)

---

braze+
CMT

Characteristic for brazing processes with the special Braze+ gas nozzle and high brazing speed (gas nozzle with narrow opening and high flow rate)

CC/CV
CC/CV

Characteristic with constant current or constant voltage curve for operating the welding machine with a power supply unit. A wirefeeder is not required.

cladding
CMT, LSC, PMC

Characteristics for overlay welding with low penetration, low dilution and wide weld seam flow for improved wetting

constant current
PMC

Constant current characteristic
For applications where no arc length control is required (stickout changes are not compensated)

CW additive
PMC, ConstantWire

Characteristic with constant wire speed progression for the additive production process
With this characteristic, no arc is ignited, the welding wire is only fed as filler metal.

dynamic
CMT, PMC, Puls, Standard

Characteristic for deep penetration and reliable root fusion at high welding speeds

dynamic +
PMC

Characteristic with short arc length for high welding speeds with arc length control independent of the material surface.

edge
CMT

Characteristic for welding corner seams with targeted energy input and high welding speed

flanged edge
CMT

Characteristic for welding flange welds with targeted energy input and high welding speed

galvanized
CMT, LSC, PMC, Puls, Standard

Characteristics for galvanised sheet surfaces (low risk of zinc pores and reduced penetration)

galvannealed
PMC

Characteristics for iron-zinc-coated material surfaces

gap bridging
CMT, PMC

Characteristic for the best gap-bridging ability due to very low heat input

hotspot
CMT

Characteristic with hot start sequence, specially for plug welds and MIG/MAG spot weld joints

---

mix [2) / 3)]
PMC

Also required:
Pulse and PMC welding packages

Characteristic for generating a rippled weld.
The heat input into the component is specifically controlled by the cyclical process change between pulsed and dip transfer arc.

---

marking
Characteristics for marking conductive surfaces

Characteristic for marking electrically conductive surfaces.
Marking is performed by low power spark erosion and a reversing wire movement.

---

mix [2) / 3)]
CMT

Also required:
CMT drive unit WF 60i Robacta Drive CMT
Pulse, Standard and CMT welding packages

Characteristic for producing a rippled weld.
The heat input into the component is specifically controlled by the cyclical process change between pulsed arc or CMT.

---

mix drive [2)]
PMC

Also required:
PushPull drive unit WF 25i Robacta Drive or WF 60i Robacta Drive CMT
Pulse and PMC welding packages

Characteristic for producing a rippled weld by means of a cyclical process interruption of the pulsed arc and an additional wire movement

---

multi arc
PMC

Characteristic for components being welded by several arcs each influencing the other Ideal for increased welding circuit inductance or mutual welding circuit coupling.

---

open root
LSC, CMT

Characteristic with powerful arc, especially suitable for root passes with air gap

---

PCS [3)]
PMC

The characteristic changes directly from a pulsed arc to a concentrated spray arc above a certain power. The advantages of pulsed and spray arcs combined in a single characteristic.

PCS mix
PMC

The characteristic changes cyclically between a pulsed or spray arc to a dip transfer arc, depending on the power range. It is especially suitable for vertical-up welds due to the alternating hot and then cold, supporting process phase.

pin
CMT

Characteristic for welding brads to an electrically conductive surface
The retraction movement of the wire electrode and the set current curve progression define the appearance of the pin.

pin picture
CMT

Characteristic for welding brads with a spherical end onto an electrically conductive surface, especially for creating pin pictures.

pin print
CMT

Characteristic for writing texts, patterns or markings on electrically conductive component surfaces
Writing takes place by positioning individual dots the size of a welding droplet.

pin spike
CMT

Characteristic for welding brads with pointed ends onto an electrically conductive surface.

pipe
PMC, Pulse, Standard

Characteristics for pipe applications and positional welding on narrow gap applications

pipe cladding
PMC, CMT

Characteristics for overlay welding of outer pipe claddings with little penetration, low dilution and wide weld seam flow

retro
CMT, Puls, PMC, Standard

The characteristic has the same weld properties as the predecessor TransPuls Synergic (TPS) series.

ripple drive [2)]
PMC

Also required:
CMT drive unit WF 60i Robacta Drive CMT

Characteristic for producing a rippled weld by means of a cyclical process interruption of the pulsed arc and an additional wire movement.
The weld rippling characteristics are similar to that of TIG welds.

root
CMT, LSC, Standard

Characteristics for root passes with powerful arc

seam track
PMC, Pulse

Characteristic with amplified current control, especially suitable for the use of a seam tracking system with external current measurement.

TIME
PMC

Characteristic for welding with very long stickout and TIME shielding gases to increase the deposition rate.
(TIME = Transferred Ionized Molten Energy)

---

universal
CMT, PMC, Puls, Standard

The characteristic is ideal for all standard welding tasks.

---

weld+
CMT

Characteristics for welding with short stickout and Braze+ gas nozzle (gas nozzle with small opening and high flow velocity)

---

1) Can only be used with iWave AC/DC multiprocess welding machines
2) Welding characteristics with special properties provided by additional hardware
3) Mixed process characteristics

Welding processes and process functions

MIG/MAG pulse synergic welding

MIG/MAG pulse synergic welding is a pulsed-arc process with controlled material transfer.
In the base current phase, the energy supply is reduced to such an extent that the arc is only just stable and the surface of the workpiece is preheated. In the pulsing current phase, a precisely dosed current pulse ensures the targeted detachment of a droplet of welding material.
This principle guarantees low-spatter welding and precise work over the entire power range.

MIG/MAG standard synergic welding

The MIG/MAG standard synergic welding process is a MIG/MAG welding process across the entire power range of the welding machine with the following arc types:

Dip transfer arc
Droplet transfer takes place during a short circuit in the lower power range.

Intermediate arc
The intermediate arc alternates irregularly between short circuits and spray transitions. This results in increased spatter. It is not possible to use this arc effectively, so it is better to avoid it.

Spray arc
A short circuit-free transfer of material takes place in the high power range.

PMC process

PMC = Pulse Multi Control

PMC is a pulsed arc welding process with high-speed data processing, precise recording of the process status and improved droplet detachment. Faster welding possible with a stable arc and even penetration.

LSC process

LSC = Low Spatter Control

LSC is a low-spatter dip transfer arc process. Before the short circuit bridge is broken, the current is lowered and re-ignition takes place at significantly lower welding current values.

SynchroPulse welding

SynchroPulse is available for all processes (standard/pulsed/LSC/PMC).
Due to the cyclical change of welding power between two operating points, SynchroPulse achieves a flaking seam appearance and non-continuous heat input.

CMT process

CMT = Cold Metal Transfer

A special CMT drive unit is required for the CMT process.

The reversing wire movement in the CMT process results in a droplet detachment with improved dip transfer arc properties.
The advantages of the CMT process are as follows
- Low heat input
- Less spattering
- Reduced emissions
- High process stability

The CMT process is suitable for:
- Joint welding, cladding and brazing – particularly in the case of high requirements in terms of heat input and process stability
- Light-gauge sheet welding with minimal distortion
- Special connections, such as copper, zinc, and steel/aluminium

NOTE!

A CMT reference book is available complete with typical applications; see ISBN 978-3-8111-6879-4.

CMT Cycle Step welding process

CMT Cycle Step is a further development of the CMT welding process. A special CMT drive unit is also required for this process.

CMT Cycle Step is the welding process with the lowest heat input.
The CMT Cycle Step welding process switches cyclically between CMT welding and pauses of an adjustable duration.
These pauses in the welding process lower the heat input; the continuity of the weld seam is maintained.
Individual CMT cycles are also possible. The size of the CMT spot welds is determined by the number of CMT cycles.

SlagHammer

The SlagHammer function is implemented in all steel characteristics.
In conjunction with a CMT drive unit WF 60i CMT, slag is knocked off the weld seam and wire electrode end by a reversing wire movement without arc before welding.
Knocking off the slag ensures reliable and precise ignition of the arc.

A wire buffer is not required for the SlagHammer function.
The SlagHammer function is automatically executed if a CMT drive unit is present in the welding system.



An active SlagHammer function is displayed in the status bar below the SFI symbol.

Stitch welding

With stitch welding, all welding processes can be cyclically interrupted. This facilitates targeted control of the heat input.
Welding time, pause time and the number of interval cycles can be set individually (e.g. for producing a rippled weld seam, for tacking light-gauge sheets or for longer pause times for simple, automatic spot welding mode).

Stitch welding is possible with any operating mode.
In special 2-step mode and special 4-step mode, no interval cycles are performed during the start and end phases. The interval cycles are only executed in the main process phase.

ConstantWire

ConstantWire is used in laser brazing and other laser welding applications.
The welding wire is fed to the solder or weld pool, and the ignition of an arc is prevented by controlling the wire speed.
Constant current (CC) and constant voltage (CV) applications are possible.
The welding wire can be fed either under current for hot wire applications or currentless for cold wire applications.

Controls, connections and mechanical components

Control panel

General

Welding parameters can be easily changed and selected using the adjusting dial.
The parameters are shown on the display while welding is in progress.

The synergic function ensures that other welding parameters are also adjusted whenever an individual parameter is changed.

NOTE!

As a result of firmware updates, you may find that your device has certain functions that are not described in these operating instructions, or vice versa. Certain illustrations may also differ slightly from the actual controls on your device, but these controls function in exactly the same way.

Danger from incorrect operation

⚠ **WARNING!**

Danger due to incorrect operation and incorrectly performed work.
This can result in serious injury and damage to property.

- ▶ All the work and functions described in this document must only be carried out by technically trained and qualified personnel.
- ▶ Fully read and understand this document.
- ▶ Read and understand all safety rules and user documentation for this device and all system components.

Control panel



43,0001,3547

No.	Function
(1)	**USB port for servicing purposes** For connecting TPS/i Licence Key, TPS/i Demonstrator Dongle und TPS/i Service Dongle For details on the function of the USB port, see page 201. **IMPORTANT!** The USB port is not electrically isolated from the welding circuit. Devices that establish an electrical connection with another device must therefore not be connected to the USB port.
(2)	**Adjusting dial with turn/press function** To select elements, set values and scroll through lists
(3)	**Display (touchscreen)** - For operating the welding machine by touching the display - For displaying values - For navigating in the menu

(4)	**Key card reader for NFC keys** - For locking/unlocking the welding machine using NFC keys - For logging on different users (with active user management and assigned NFC keys) NFC key = NFC card or NFC key ring
(5)	**Wire threading button** To thread the wire electrode into the torch hosepack with no accompanying flow of gas or current
(6)	**Gas-test button** For setting the required gas flow rate on the gas pressure regulator. After pressing this button, gas flows for 30 seconds. Press the button again to stop the gas flow prematurely.

Input options

Touch the display



Pressing on (and therefore selecting) an element on the display highlights this element.

Turn the adjusting dial



- Select elements on the display
- Change values

For certain parameters, a value changed by turning the adjusting dial is applied automatically without having to press the adjusting dial.

Press the adjusting dial



- Apply highlighted elements, e.g. to change the welding parameter value.
- Apply certain welding parameter values.

Press the button



Press the wire threading button to thread the wire electrode into the welding torch hosepack without an accompanying flow of gas or current.
The display shows an animated graphic with motor current, motor power and wire length fed.



When the gas-test button is pressed, gas will flow out for 30 seconds. Press again to end the process prematurely.
The display shows an animated graphic with the remaining gas flow time.

Display and status line

Display

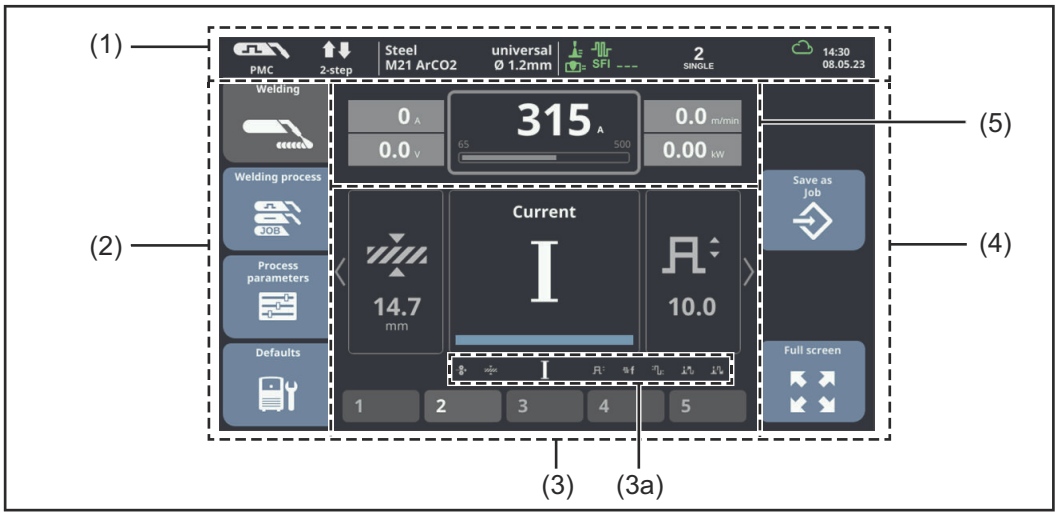

No.	Function
(1)	**Status bar** The status bar provides information on: - Current welding data - Bluetooth or WLAN status - Logged-on user/locked state of the welding machine - Active faults - Time and date - and more For details, see from page 45
(2)	**Left-hand menu bar** The left-hand menu bar contains the menus: - Welding - Welding process - Process parameters - Defaults The buttons in the left-hand menu bar are actuated by touching the display.
(3)	**Main area** The welding parameters, graphics, lists or navigation elements are shown in the main area. The structure of the main area and the elements shown in it vary according to the application. (3a) Available welding parameters The main area is operated via the adjusting dial or by touching the display.

(4) **Right-hand menu bar**
Depending on the menu selected in the left-hand menu bar, the right-hand menu bar may be used as follows:
- As a function ribbon containing application and function buttons
- For navigating through the 2nd menu level

The buttons in the right-hand menu bar are actuated by touching the display.

(5) **Welding data display**
Welding current, welding voltage, wire speed, welding power (in kW)

Different values are displayed here depending on the situation:
- When setting the standard value
- The actual value during welding
- After welding, the hold value or average value - depending on the setting in the default settings (see also from page 184)

Status bar

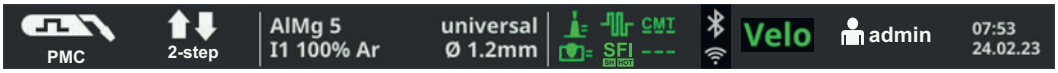

(1) (2) (3) (4) (5) (6) (7) (8)

The status bar is divided into segments and contains the following information:

(1) **Current welding process**

(2) **Current operating mode**

(3) **Current welding program**
(material, shielding gas, characteristic and wire diameter)

(4) **Process functions display**

- Arc length stabilizer
- Penetration stabilizer
- SynchroPulse
- Spatter Free Ignition, SlagHammer, SFI HotStart
- CMT Cycle Step (only in combination with the CMT welding process)
- Interval

Symbol lights up green:
Process function is active

Symbol is grey:
Process function is available but is not being used for welding

(5) **Bluetooth/WiFi status indicator (certified devices only)**

- Symbol lights up blue:
  Active connection to a Bluetooth device
- Symbol is grey:
  Bluetooth device detected, no active connection

or

Intermediate arc indicator



(6) **During operation with a Velo system:**
The Velo status
Symbol lights up green:
Velo function is active

Symbol is grey:
Velo function is deactivated

Symbol is grey and struck through:
The Velo function is not supported by the set filler metal or characteristic.

(7) **Currently logged-on user (with active user management)**

or

the key symbol when the welding machine is locked
(e.g. when the profile/role "locked" is active)



(8) **Time and date**

NOTE!

The following functions can be selected and set directly in the status bar:
(1) Welding process
(2) Operating mode
(3) Characteristic (e.g. dynamic, root, universal, etc.)
(4) SynchroPulse, Spatter Free Ignition, Interval, CMT Cycle Step, Penetration stabilizer, Arc length stabilizer

▶ Touch the desired function in the status bar and set it in the window that opens.



Additional information on the characteristic (3) and for SynchroPulse, SFI, etc. (4) can be called up using the respective buttons.

Status bar – Current limit reached

If the characteristic-dependent current limit is reached while MIG/MAG welding, a corresponding message appears in the status bar.



1 For detailed information, select the status bar

The information appears.

2 Select "Hide information" to exit

3 Reduce the wire speed, welding current, welding voltage or material thickness

or

Increase the distance between the contact tip and the workpiece

Further information on the current limit can be found in the Troubleshooting section on page 245

Switching to full screen



The display is shown in full screen mode:



2 Exit full screen mode:

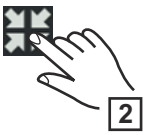

NOTE!

Hiding the EasyJobs produces the optimal full-screen display:

▶ Defaults / View / EasyJobs / EasyJobs Off

With a few default settings and the setting options via the status bar, the welding machine can be fully operated in full-screen mode for manual applications.

Next page - Previous page

> ***NOTE!***
>
> **The number and sequence of the displayed parameters may vary depending on the device type, equipment and available Welding Packages.**

If there are more than six parameters in a menu, the parameters are divided into several pages.
Navigate between several pages using the "Next page" and "Previous page" buttons:

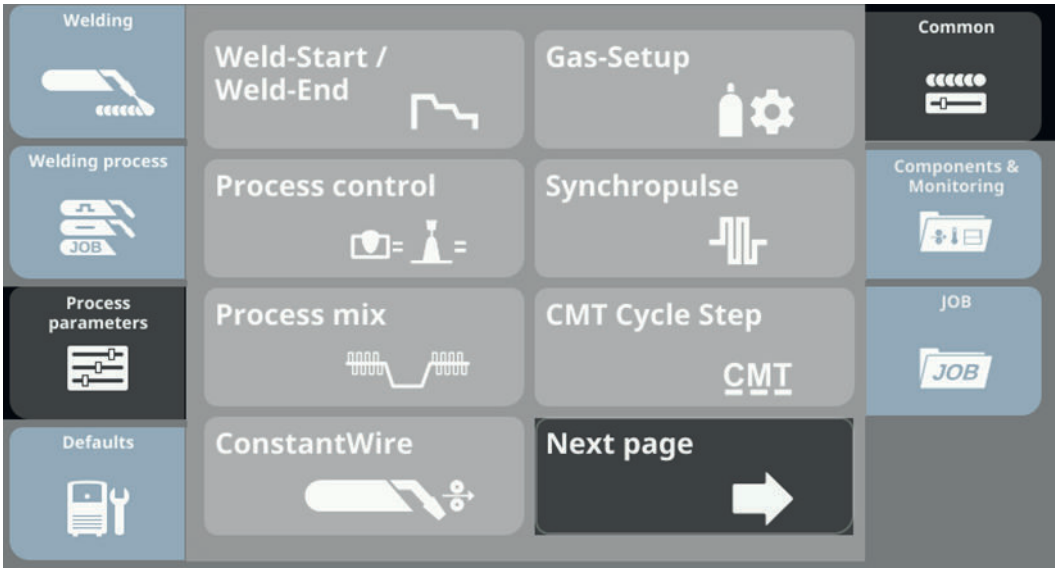

Example: Process parameters / Common - Next page

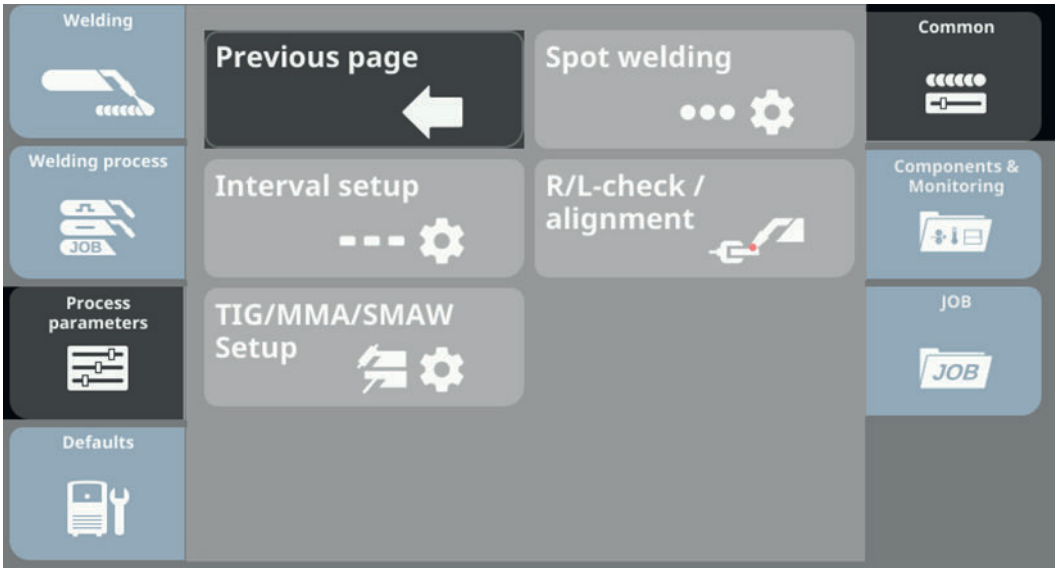

Example: Process parameters / Common - Previous page

Animated graphics

Animated graphics are shown on the display for certain parameters.
These animated graphics change when the value of the parameter is changed.

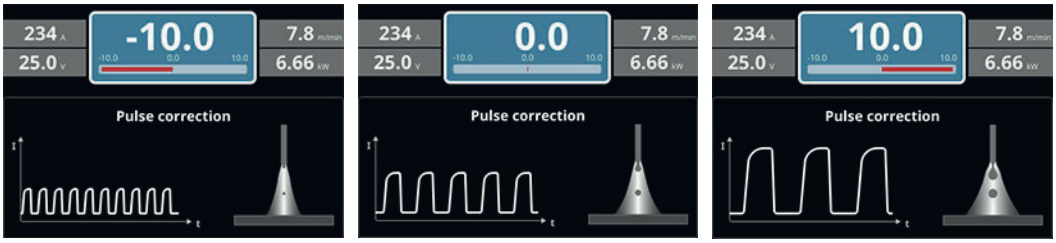

Example: Welding parameters for pulse correction -10 / 0 / +10

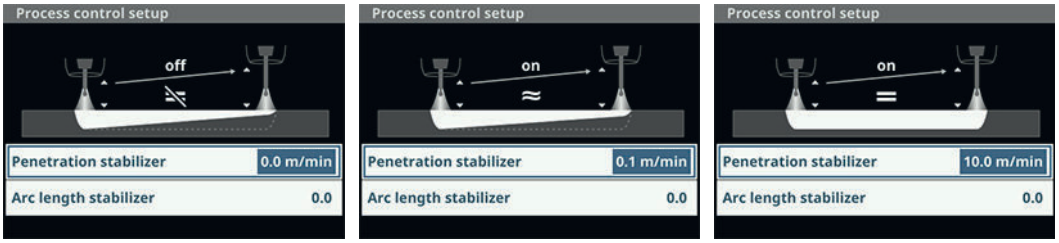

Example: Process parameters / Process control / Penetration stabilizer 0 / 0.1 / 10.0

Greyed out parameters

NOTE!

In the menus, certain parameters are greyed out because they have no function with the currently selected settings.

▶ Greyed-out parameters can be selected and changed, but have no influence on the current welding process or the welding result.

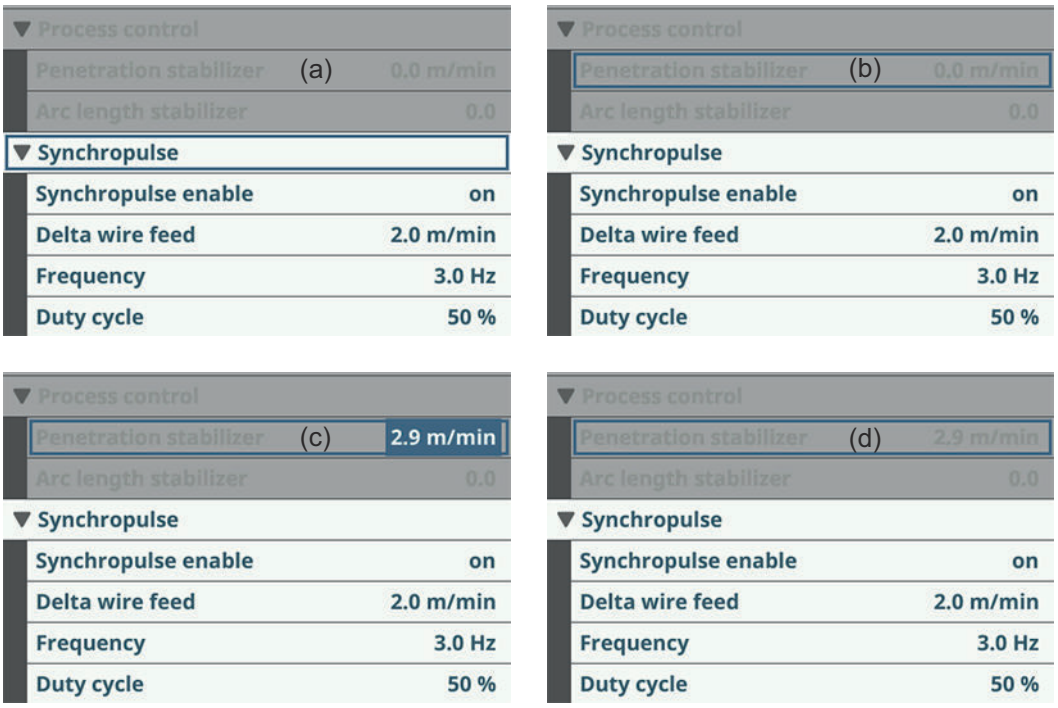

(a) Greyed out parameter (e.g. penetration stabilizer)
(b) Greyed out parameter selected
(c) Value of the greyed out parameter is changed
(d) Greyed out parameter with changed value - no effect with current settings

Connections, switches and mechanical components

TPS 320i C welding machine

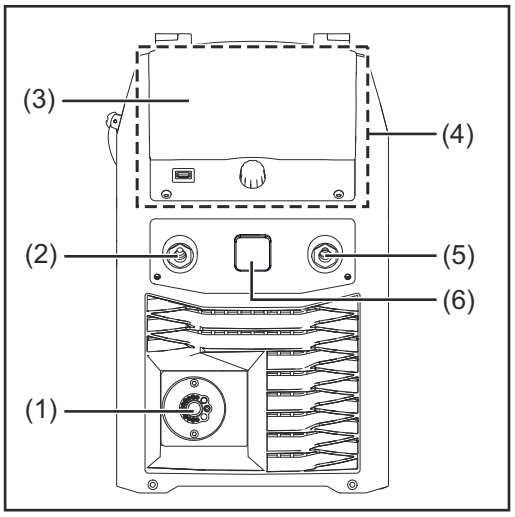

Front

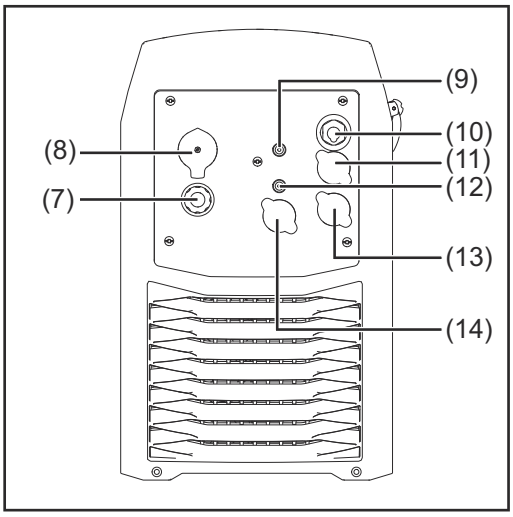

Rear

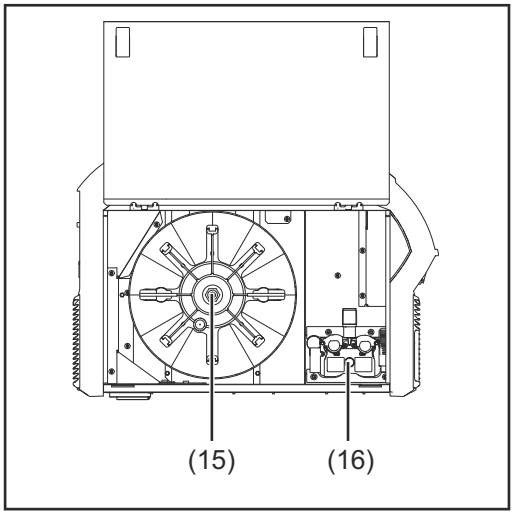

Side view

No.	Function
(1)	**Welding torch connection** For connecting the welding torch
(2)	**(-) current socket with bayonet latch** Used to connect the return lead cable during MIG/MAG welding
(3)	**Control panel cover** For protecting the control panel
(4)	**Control panel with display** For operating the welding machine
(5)	**(+) current socket with bayonet latch**
(6)	**Blanking cover** Reserved for the TMC connection socket of the TIG option
(7)	**Mains cable with strain relief**

(8)	**Mains switch** For switching the welding machine on and off
(9)	**Blanking cover** Reserved for TIG shielding gas connection option
(10)	**Blanking cover** Reserved for optional 2nd (-) current socket or 2nd (+) current socket
(11)	**Blanking cover** Reserved for external sensor option
(12)	**MIG/MAG shielding gas connection socket**
(13)	**Blanking cover** Reserved for Ethernet option
(14)	**Blanking cover** Reserved for optional 2nd SpeedNet connection socket
(15)	**Wirespool holder with brake** For holding standard wire spools weighing up to 16 kg (35.27 lbs) and with a max. diameter of 300 mm (11.81 in)
(16)	**4-roller drive**

Before installation and commissioning

Minimum equipment needed for welding task

General	Depending on the welding process, a certain minimum equipment level is required in order to work with the welding machine. The welding processes and the corresponding minimum equipment for the welding operation are described in the following.
MIG/MAG gas-cooled welding	- Welding machine - Return lead cable - MIG/MAG welding torch, gas-cooled - Shielding gas supply - Wire electrode
MIG/MAG water-cooled welding	- Welding machine - Cooling unit - Return lead cable - MIG/MAG welding torch, water-cooled - Shielding gas supply - Wire electrode
Manual CMT welding	- Welding machine - Standard, Pulse and CMT welding packages enabled on the welding machine - Return lead cable - PullMig CMT welding torch incl. CMT drive unit and CMT wire buffer **IMPORTANT!** For water-cooled CMT applications, a cooling unit is also required! - OPT/i PushPull - CMT interconnecting hosepack - Wire electrode - Shielding gas connection (shielding gas supply)
TIG DC welding	- Welding machine - Return lead cable - TIG gas-valve torch - Shielding gas connection (shielding gas supply) - Filler metal (depending on the application)
Manual metal arc welding	- Welding machine - Return lead cable - Electrode holder with welding power-lead - Rod electrodes

Before installation and commissioning

Danger from incorrect operation

⚠ WARNING!

Danger due to incorrect operation and incorrectly performed work.
This can result in serious injury and damage to property.
- ▶ All the work and functions described in this document must only be carried out by technically trained and qualified personnel.
- ▶ Fully read and understand this document.
- ▶ Read and understand all safety rules and user documentation for this device and all system components.

Generator-powered operation

The welding machine is generator-compatible.

The maximum apparent power S_{1max} of the welding machine must be known in order to select the correct generator output.
The maximum apparent power S_{1max} of the welding machine is calculated for 3-phase devices as follows:

$$S_{1max} = I_{1max} \times U_1 \times \sqrt{3}$$

See device rating plate or technical data for I_{1max} and U_1 values

The generator apparent power S_{GEN} needed is calculated using the following rule of thumb:

$$S_{GEN} = S_{1max} \times 1.35$$

A smaller generator may be used when not welding at full power.

IMPORTANT! The generator apparent power S_{GEN} must always be higher than the maximum apparent power S_{1max} of the welding machine.

NOTE!

The voltage delivered by the generator must never violate the upper or lower limits of the mains voltage tolerance range.
Details of the mains voltage tolerance can be found in the "Technical data" section.

Information on system components

The steps and activities described below include references to various system components, including:
- Trolleys
- Cooling units
- Wire-feed unit holders
- Wire-feed units
- Interconnecting hosepacks
- Welding torches
- etc.

For more detailed information about installing and connecting the system components, please refer to the appropriate operating instructions.

Connecting the mains cable

General

If no mains cable is connected, a mains cable that is suitable for the connection voltage must be fitted before commissioning.
A universal strain-relief device for cable diameters from 12-30 mm (0.47-1.18 in.) is fitted to the welding machine.

Strain-relief devices for other cable cross-sections must be designed accordingly.

Stipulated mains cables

Welding machine mains voltage: USA & Canada * | Europe
TPS 320i C /nc 3 x 380 V, 3 x 400 V, 3 x 460 V: AWG 14 | 4G 2.5 mm²
TPS 320i C /MV/nc 3 x 200 V, 3 x 230 V: AWG 10 | 4G 4.0 mm² 3 x 380 V, 3 x 400 V, 3 x 460 V: AWG 14 | 4G 2.5 mm²
TPS 320i C /S/nc ** 3 x 460 V, 3 x 575 V: AWG 14 | -

* Cable type for USA / Canada: Extra-hard usage

** Welding machine without CE mark; not available in Europe

AWG = **A**merican **w**ire **g**auge

Mains cable connection safety

⚠ WARNING!

Danger due to work that has been carried out incorrectly.
This can result in serious injury and damage to property.
- ▶ The work described below must only be carried out by trained and qualified personnel.
- ▶ Observe national standards and directives.

⚠ CAUTION!

Danger due to improperly prepared mains cable.
This can result in short circuits and damage to property.
- ▶ Fit ferrules to all phase conductors and the ground conductor of the stripped mains cable.

Connecting the mains cable - general

IMPORTANT! The ground conductor should be approx. 20 - 25 mm (0.8 - 1 in.) longer than the phase conductors.

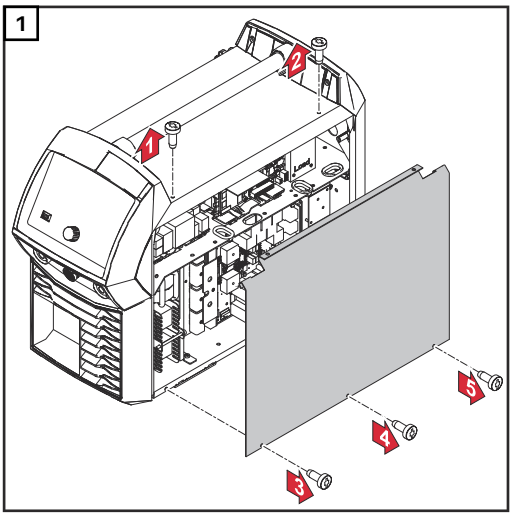

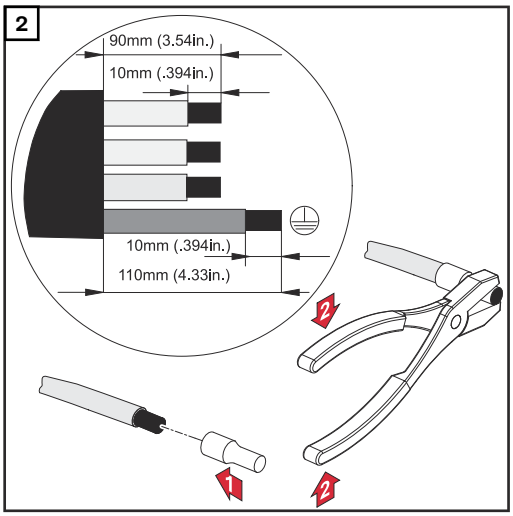

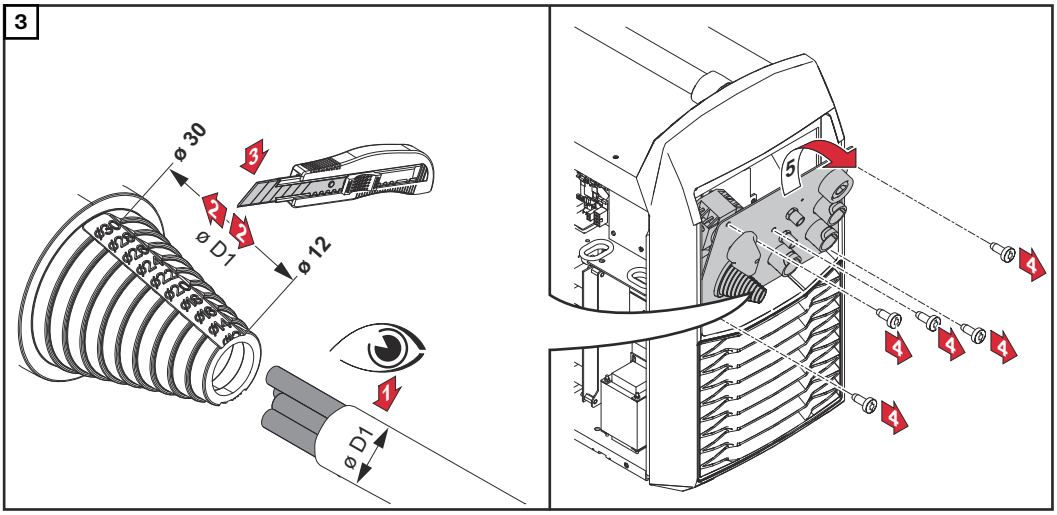

Cut the strain-relief device to length according to the cable outer diameter

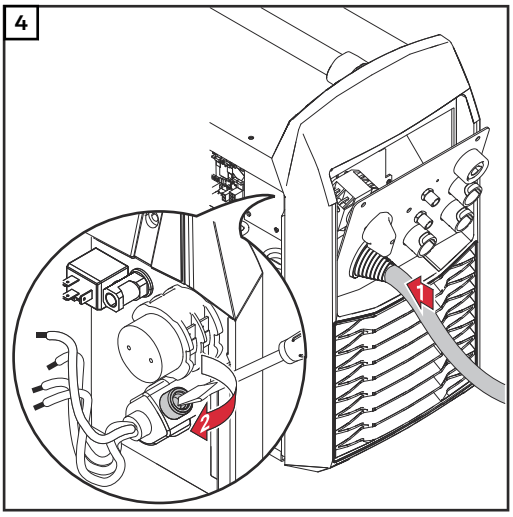

Tightening torque = 1.2 Nm
(TPS 320i C /nc, TPS 320i C /S/nc)

Tightening torque = 3.5 Nm
(TPS 320i C /MV/nc)

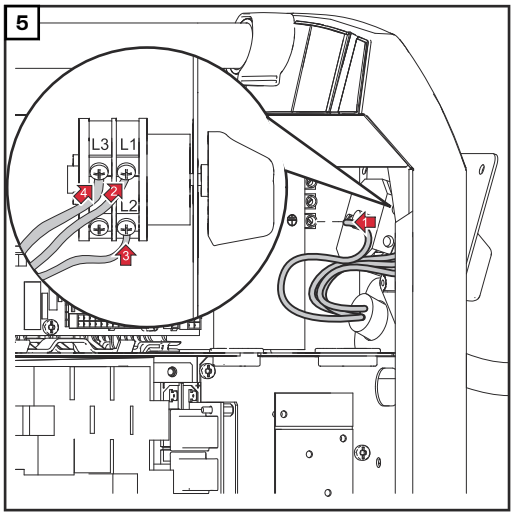

Phase conductor:

Tightening torque = 1.5 Nm, TX 15
(TPS 320i C /nc, TPS 320i C /S/nc)

Tightening torque = 1.5 Nm, TX 25
(TPS 320i C /MV/nc)

Ground conductor:
Tightening torque = 1.2 Nm

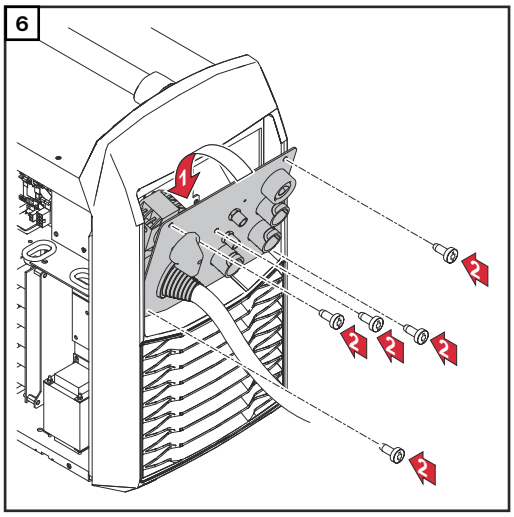

5 x TX25
Tightening torque = 3 Nm

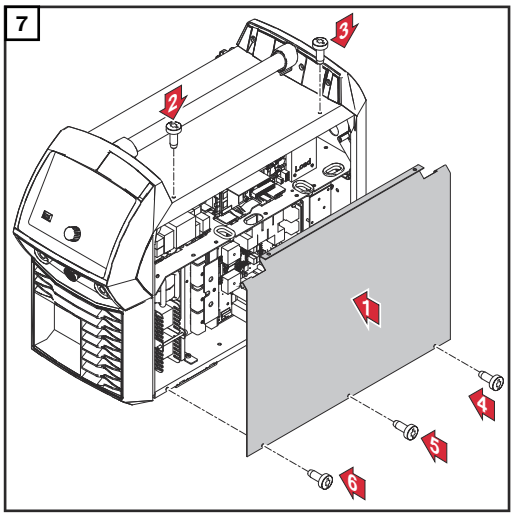

Transport and setup regulations

Transporting individual devices

⚠ WARNING!

Danger from electric current.
This can result in serious personal injury.
- ▶ Do not lift or transport operational devices.
- ▶ Switch off devices before transport or lifting and disconnect from the mains.
- ▶ Disconnect ground earth connections before transport.

⚠ WARNING!

Danger due to device toppling over.
This can result in serious injury and damage to property.
- ▶ Use only transport equipment supplied by the manufacturer when transporting devices by crane.
- ▶ Hook chains or ropes onto the suspension points provided on the transport equipment.
- ▶ Chains or ropes must be at the smallest angle possible to the vertical.
- ▶ Observe and comply with applicable national and regional guidelines for the prevention of accidents and risks during transport.

⚠ CAUTION!

Danger due to damaged devices.
This can result in personal injury and damage to property.
- ▶ After transport and before commissioning, visually inspect the device for damage.
- ▶ Any damage must be repaired by trained service technicians before commissioning the device.

NOTE!

The carrying handle on the device is only to be used for transport by hand.
- ▶ The carrying handle is not suitable for transporting with a crane, counterbalanced lift truck or other mechanical hoist.

Transporting welding systems

Example of a welding system with the following components:

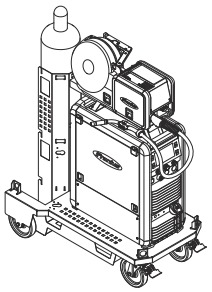

- Trolley
- Cooling unit
- Welding machine
- Wirefeeder mount
- Wirefeeder
- Gas cylinder holder
- Shielding gas cylinder
- Welding torch

⚠ WARNING!

Danger due to falling devices or components.
This can result in serious injury and damage to property.

- ▶ Before transporting the welding system, detach the wirefeeder and the shielding gas cylinder and allow coolant to drain completely.
- ▶ Ensure that the remaining system components are securely seated on the trolley.
- ▶ Use only transport equipment supplied by the manufacturer when transporting welding systems by crane.
- ▶ Hook chains or ropes onto the suspension points provided on the transport equipment.
- ▶ Chains or ropes must be at the smallest angle possible to the vertical.
- ▶ Observe and comply with applicable national and regional guidelines for the prevention of accidents and risks during transport.

Checking lifting tackle

⚠ WARNING!

Danger from machines and components falling as a result of damaged lifting tackle.
This can result in serious injury and damage to property.

- ▶ Regularly check all lifting tackle used for crane transport, such as straps, buckles, chains, etc., for mechanical damage, corrosion and changes caused by other environmental factors.
- ▶ The inspection interval and scope of the inspection must comply with the relevant valid national standards and guidelines.

Setup regulations

⚠ WARNING!

Danger due to devices or welding systems toppling over.
This can result in serious injury and damage to property.

- ▶ Set up the device securely on an even, solid surface.
- ▶ The maximum permissible tilt angle is 10°.
- ▶ Check all screw connections are tightly fastened after installation.

⚠ WARNING!

Danger from areas at risk of fire and explosion as well as from areas with increased electrical risk.
This can result in serious injury and damage to property.
- ▶ Observe national and international regulations for areas at risk of fire and explosion.
- ▶ Observe national and international regulations for areas with increased electrical risk.

⚠ CAUTION!

Danger due to inappropriate selection of the installation location.
This can result in damage to property.
- ▶ Only set up and operate the device in accordance with the protection class shown on the rating plate.
- ▶ The ambient air must be free from dust, acids, corrosive gases or substances and similar.
- ▶ Do not install and operate the device over 2000 m (6561 ft. 8.16 in.) above sea level.

The device is tested to IP 23 protection, meaning:
- Protection against penetration by solid foreign bodies with diameters greater than 12.5 mm (0.49 in.)
- Protection against spraywater at any angle up to 60° to the vertical

The device can be set up and operated outdoors in accordance with IP23. Avoid direct wetting (e.g. from rain).

Mains connection

Mains connection

⚠ WARNING!

Risk of electric shock due to inadequate mains connection.
This can result in serious injury and death.
- ▶ Only connect the device to a mains supply with a ground conductor.
- ▶ Only connect the device to the mains via a connector system with a ground conductor contact.
- ▶ If operating the device on a mains supply without ground conductor and on a socket without ground conductor contact, observe all national regulations for protective separation.

⚠ CAUTION!

An inadequately dimensioned electrical installation can cause serious damage to property.
- ▶ The mains lead and its fuse protection must be dimensioned to suit the local power supply.
  The technical data shown on the rating plate applies.

NOTE!

Devices with a higher rating may affect the energy quality of the mains due to their current consumption.
- ▶ Before connecting the device to the mains, check with the grid operator whether the device may be connected.
- ▶ The maximum permissible mains impedance that is decisive for a mains connection is stated in the technical data.

- The devices are designed for the mains voltage specified on the rating plate.
- Devices with a rated welding voltage of 3 x 575 V must be operated on three-phase systems with earth neutral.
- If your version of the appliance does not come with mains cables and mains plugs ready-fitted, these must be fitted by a qualified person in accordance with national standards.
- The fuse protection for the mains lead is indicated in the technical data.

IMPORTANT! Ensure that the mains connection is earthed properly!

Due to local regulations and national guidelines, a residual current circuit breaker may be required when connecting a device to the public grid. The type of residual current circuit breaker recommended for the device is specified in the technical data.

Dangers during welding

Danger from incorrect operation or misuse

Danger from incorrect operation and misuse

⚠ WARNING!

Danger from incorrect operation or misuse.
This can result in serious personal injuries – including to third parties, damage to property and impaired welding results.

- ▶ All persons involved in commissioning, operating, maintaining and servicing the device must be appropriately qualified and have knowledge of welding.
- ▶ Read and follow these operating instructions carefully.
- ▶ The operating instructions must always be at hand wherever the device is being used.
- ▶ Observe generally applicable and regional rules on accident prevention and environmental protection.

Danger from mains current and welding current

Danger from mains current and welding current

⚠ WARNING!

Danger from electric shocks.
These can result in serious injury and death.

- ▶ Do not touch live parts inside or outside the device.
  During MIG/MAG welding, the welding wire, the wire spool, the feed rollers and all pieces of metal that are in contact with the welding wire are live.
- ▶ Always set the wirefeeder up on a sufficiently insulated surface or use a suitable, insulated wirefeeder mount.
- ▶ Use an adequately insulated, dry base or cover for the earth or ground potential.
  This base or cover must extend over the entire area between the body and the earth or ground potential.
- ▶ Only use undamaged, insulated and adequately dimensioned cables and leads.
- ▶ Do not wrap cables or leads around the body or parts of the body.
- ▶ Never touch the welding wire, tungsten electrode or rod electrode when the welding machine is switched on.
- ▶ Earth the workpiece.
- ▶ Switch off unused devices.
- ▶ Before working on the device, switch off the device, pull out the mains plug and attach a clearly legible and easy-to-understand warning sign to prevent anyone from plugging the mains plug back in and switching it on again.
- ▶ After opening the device, ensure that all components in the device are de-energised – especially components that store electrical charges.

⚠ WARNING!

Danger from electromagnetic fields.
Damage to health and effects on the health of persons in the vicinity, e.g. those with pacemakers and hearing aids, may result.

- ▶ Maintain as large a distance as possible between the welding power-leads and the head/torso of the welder.
- ▶ Do not carry welding power-leads and hosepacks over the shoulders or wind them around any part of the body.
- ▶ Individuals with pacemakers must seek advice from their doctor before approaching the device or any welding that is in progress.

⚠ CAUTION!

Danger from stray welding currents.
This can result in overheating of components, fire, destruction of ground conductors and damage to the device and other electrical equipment.

- ▶ Ensure that the workpiece is held securely by the workpiece clamp.
- ▶ Attach the workpiece clamp as close as possible to the area that is to be welded.
- ▶ Position the device with sufficient insulation against electrically conductive environments, such as insulation against conductive floor or insulation to conductive racks.
- ▶ If power distribution boards, twin-head mounts, etc. are being used, ensure that the unused welding torch/electrode holder is adequately insulated.
- ▶ In the case of automated MIG/MAG applications, ensure that only an insulated wire electrode is routed from the welding wire drum, large wirefeeder spool or wire spool to the wirefeeder.

Danger from electromagnetic emissions

Electromagnetic compatibility (EMC) describes the unwanted reciprocal influence of electrical/electronic devices.

The EMC device classification is stated on the rating plate of the device or in the technical data.

Despite compliance with the standardised emission limit values, electrical devices can influence each other in special cases in the intended area of application.

Equipment that may be susceptible to interference from the device includes:
- Safety devices
- Mains leads, signal and data transfer lines
- IT and telecommunications devices
- Measuring and calibrating devices
- Medical devices
- etc.

⚠ CAUTION!

Danger from electromagnetic emissions.
These can result in operating faults and malfunctions as well as resulting damage.

- ▶ Use suitable line filters.
- ▶ Keep welding power-leads as short as possible, allow the power-leads to run close together and lay the power-leads far away from other cables.
- ▶ Carry out equipotential bonding.
- ▶ Earth the workpiece, e.g. using suitable capacitors.
- ▶ Shield the entire welding system.
- ▶ Shield other devices nearby.

Danger from flying sparks, arc radiation and noise

Danger from flying sparks

⚠ WARNING!

Danger from flying sparks.
These can result in fires and explosions.
- ▶ Never weld close to flammable materials.
- ▶ Keep flammable materials at least 11 metres (36 ft. 1.07 in.) away from the arc, or cover with an approved cover.
- ▶ A suitable, tested fire extinguisher must be available and ready for use.
- ▶ Take appropriate measures to ensure that sparks and hot metal parts do not pass through small cracks and openings into surrounding areas.
- ▶ Only weld in areas with a fire or explosion risk or on sealed tanks, vessels or pipes if these have been prepared in accordance with the relevant national and international standards.
- ▶ Do not weld on containers in which gases, fuels, mineral oils and the like are or were stored.
- ▶ Flammable vapours should be kept away from the arc's radiation area (e.g. solvent vapours).

⚠ WARNING!

Danger due to flying sparks and hot pieces of metal.
This can result in injuries.
- ▶ Suitable protective clothing must be worn when working with the device. The protective clothing must be flame-retardant, insulating and dry, cover the whole body and be undamaged. Trousers must not have turn-ups.
- ▶ Wear stout footwear that provides insulation even in wet conditions.
- ▶ Wear suitable, electrically insulated and heat protective gloves.
- ▶ Wear a safety helmet.

Danger from arc radiation

⚠ WARNING!

Danger from arc radiation, UV rays, heat and flying sparks, which can damage the eyes and skin
This can result in injuries.
- ▶ Use a protective visor with a regulation filter element.
- ▶ Wear regulation protective goggles with side protection behind the protective visor.

Danger due to noise

⚠ CAUTION!

Danger due to increased noise exposure.
This can result in hearing damage.
- ▶ Use ear protection during welding.

Data on noise emission values

When idling and in the cooling phase following operation, the machine produces a maximum sound power level of <80 dB(A) (ref. 1 pW) corresponding to the maximum permitted operating point at standard loading in accordance with EN 60974-1.

A workplace-related sound emission value depends on various parameters, such as:

- The welding or work process (MIG/MAG, TIG, plasma, HAP),
- The selected current type (AC, DC),
- The power range,
- The type of weld metal or workpiece,
- The resonance properties of the workpiece,
- The workplace environment.
- and others.

A workplace-related sound level measurement is recommended.

Danger from welding operation

⚠ WARNING!

Danger from welding operation (dazzling, flying sparks, harmful welding fume, noise, etc.)
This can result in personal injury.

- ▶ Keep all persons not involved out of the working area while any devices are in operation or welding is in progress.
- ▶ Inform people in the vicinity about all hazards of welding operation.
- ▶ Provide suitable protective equipment.
- ▶ Erect suitable safety screens/curtains.

Danger from toxic gases and vapours

Danger from toxic gases and vapours

⚠ WARNING!

Danger from gases and vapours that are harmful to health.
Fume produced during welding contains substances that cause cancer, as stated in Monograph 118 of the International Agency for Research on Cancer.

- ▶ Use at-source extraction and a room extraction system.
- ▶ If necessary, use a welding torch with an integrated extraction device.
- ▶ Keep your face away from welding fume and gases.
- ▶ Do not breathe in fume or harmful gases.
- ▶ Ensure an adequate supply of fresh air.
  Ensure that there is a ventilation rate of at least 20 m³/h (11.77 cfm) at all times.
- ▶ Otherwise, a welding helmet with an air supply must be worn.

Danger due to missing safety devices and moving components

Danger due to missing safety devices

⚠ WARNING!

Danger due to missing, defective or circumvented safety devices.
This can result in serious personal injuries – including to third parties, damage to property and impaired welding results.

- ▶ Only operate the device when all safety devices are fully functional.
- ▶ Any safety devices that are not fully functional must be repaired by a qualified specialist before the device is switched on.
- ▶ Never bypass or disable safety devices.
- ▶ Before switching on the device, ensure that no one is likely to be endangered.

Danger from rotating parts

⚠ CAUTION!

Danger from rotating parts such as fans, gears, rollers, shafts or wire spools.
This can result in personal injury.

- ▶ Keep hands, hair, clothing and tools away from moving parts.
- ▶ Do not reach into the rotating cogs of the wire drive or into rotating drive components.

Danger due to missing covers

⚠ CAUTION!

Danger due to missing or opened covers.
This can result in personal injury.

- ▶ Ensure that all covers and side panels are in place and fitted properly before operation.
- ▶ During operation ensure all covers and side panels are closed.
- ▶ Open covers and side panels only while carrying out assembly and maintenance activities.

Danger from shielding gas cylinders and shielding gas supply

Danger from shielding gas cylinders and shielding gas supply

⚠ WARNING!

Danger due to pressurised shielding gas cylinders.
This can result in serious personal injury and damage to property as a result of explosions.

- ▶ Protect pressurised shielding gas cylinders from excessive heat, mechanical impact, slag, naked flames, sparks and arcs.
- ▶ Do not weld on pressurised shielding gas cylinders.
- ▶ Keep the shielding gas cylinders well away from any welding or other circuits.
- ▶ Do not hang the welding torch on a shielding gas cylinder.
- ▶ If the shielding gas cylinder is not connected, leave the protective cap in place on the valve on the cylinder.
- ▶ Mount shielding gas cylinders vertically and secure them to prevent them from falling over according to the instructions.
- ▶ The manufacturer's instructions must be observed and followed as well as national and international regulations for shielding gas cylinders and accessories.
- ▶ Before transporting a welding system with a trolley by crane, remove the shielding gas cylinder.
- ▶ Observe safety and maintenance instructions on the shielding gas cylinder or a central gas supply.

⚠ WARNING!

Danger from shielding gas escaping unnoticed.
Shielding gas is colourless and odourless and, in the event of a leak, can displace the oxygen in the ambient air.
This can result in serious injury and death from suffocating.

- ▶ Ensure an adequate supply of fresh air.
  There must be a ventilation rate of at least 20 m³ / hour at all times.
- ▶ Close the valve of the shielding gas cylinder or a central gas supply if no welding is taking place.
- ▶ Turn your face away from the outlet when opening a valve of a shielding gas cylinder.
- ▶ Check the shielding gas cylinder or the central gas supply for uncontrolled gas leakage before every start-up.
- ▶ When using an adapter, prior to assembly seal the device-side thread of the shielding gas connection using suitable Teflon tape.

⚠ CAUTION!

Danger from contaminated shielding gas.
This can result in damage to property and flawed welding results.

- ▶ The quality of the shielding gas must meet the following requirements:
  Solid particle size < 40 µm
  Pressure dew point < -20 °C
  Max. oil content < 25 mg/m³

Danger from hot parts and slag

Danger from hot parts and slag

⚠ CAUTION!

Danger from hot components, parts and liquids.
These can result in burns and injuries.
- ▶ Never touch the workpiece during or after welding.
- ▶ Allow hot components, hot parts and hot liquids to cool before touching (e.g. welding torch).
- ▶ Switch off an existing cooling unit before disconnecting coolant hoses.

⚠ CAUTION!

Danger from slag jumping off cooling workpieces.
This can result in burns and injuries.
- ▶ The protective equipment must also be worn when reworking workpieces, and steps must be taken to ensure that other people are also adequately protected.

Start-up

Commissioning the TPS 320i C

Danger from electric current

⚠ WARNING!

Danger from electric current.
This can result in serious injury and damage to property.
- ▶ Before starting work, switch off all the devices and components involved and disconnect them from the mains.
- ▶ Secure all the devices and components involved to prevent unintentional restarting.

⚠ WARNING!

Danger from electrical current due to electrically conductive dust in the device.
This can result in serious injury and damage to property.
- ▶ Only operate the device with an air filter fitted. The air filter is a very important safety device for achieving IP 23 protection.

General

The commissioning process for the TPS 320i C welding machine is described using a manual gas-cooled MIG/MAG application as an example.

Recommendation for water-cooled applications

- Use a PickUp 5000 trolley
- Fit the cooling unit to the PickUp 5000 trolley
- Fit the TPS 320i C welding machine to the cooling unit
- Use only water-cooled welding torches with an external water connection
- Connect the water connections on the welding torch directly to the cooling unit

Connecting the gas cylinder

⚠ WARNING!

Danger from falling gas cylinders.
This can result in serious injury and damage to property.
- ▶ Place gas cylinders on a solid, level surface so that they remain stable. Secure gas cylinders to prevent them from falling over.
- ▶ Observe the safety rules of the gas cylinder manufacturer.

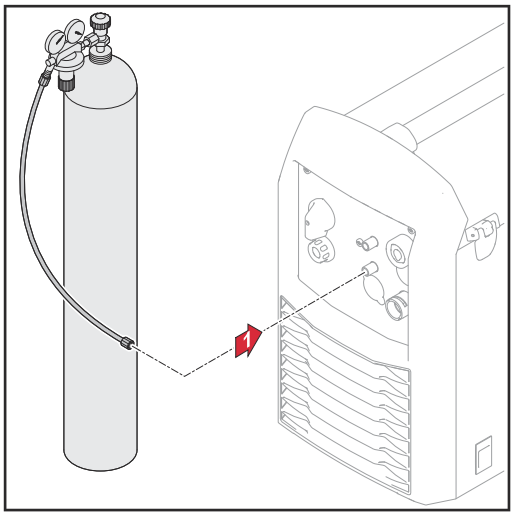

Connecting the gas hose to the TPS 320i C

1. Place the gas cylinder on a solid, level surface in such a way that it remains stable
2. Secure the gas cylinder to prevent it from toppling over (but not around the neck of the cylinder)
3. Take the protective cap off the gas cylinder
4. Briefly open the gas cylinder valve to remove any dust or dirt
5. Inspect the seal on the gas pressure regulator
6. Screw the pressure regulator onto the gas cylinder and tighten it
7. Connect the pressure regulator to the shielding gas connection on the welding machine using the gas hose

Establishing a ground earth connection

NOTE!

When establishing a ground earth connection, observe the following points:

- Use a separate return lead cable for each welding machine
- Keep the plus cable and return lead cable together as long and as close as possible
- Physically separate the welding circuits of individual welding machines
- Do not route several return lead cables in parallel;
  if parallel routing cannot be avoided, keep a minimum distance of 30 cm between the welding circuits
- Keep the return lead cable as short as possible, provide a large cable cross-section
- Do not cross return lead cables
- Avoid ferromagnetic materials between the return lead cable and the interconnecting hosepack
- Do not wind up long return lead cables - coil effect!
  Lay long return lead cables in loops (see figure below)
- Do not route return lead cables in iron pipes, metal cable conduits or on steel beams, avoid cable ducts;
  (routing of plus cables and return lead cables together in an iron pipe does not cause any problems)
- If there are several return lead cables, keep the grounding points on the component as far away from one another as possible and prevent crossed current paths from occurring underneath the individual arcs
- Use compensated interconnecting hosepacks (interconnecting hosepacks with integrated return lead cable)

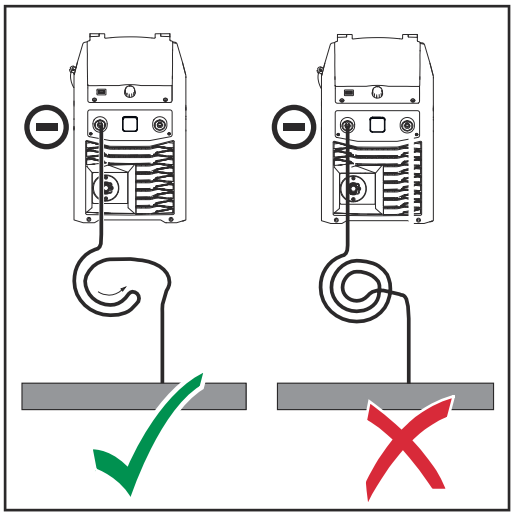

Lay the grounding cable in loops - do not coil the grounding cable

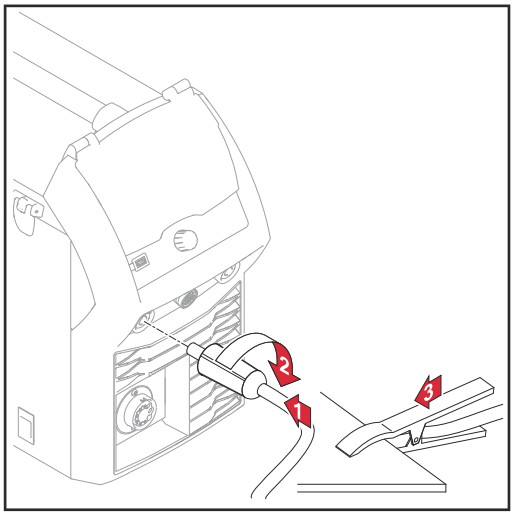

Connecting the return lead cable to the TPS 320i C

1 Plug the return lead cable into the (-) current socket

2 Twist the return lead cable to fasten it

3 Use the other end of the return lead cable to establish a connection to the workpiece

⚠ CAUTION!

A shared ground earth connection for multiple welding machines will have an adverse effect on welding results!
If multiple welding machines are being used to weld a component, a shared ground earth connection can have a massive impact on the welding results.

- ▶ Separate the welding circuits!
- ▶ Provide a different ground earth connection for each welding circuit!
- ▶ Do not use a single, shared return (ground) lead!

Connecting the welding torch

1 Before connecting the welding torch, check that all cables, lines and hosepacks are undamaged and properly insulated.

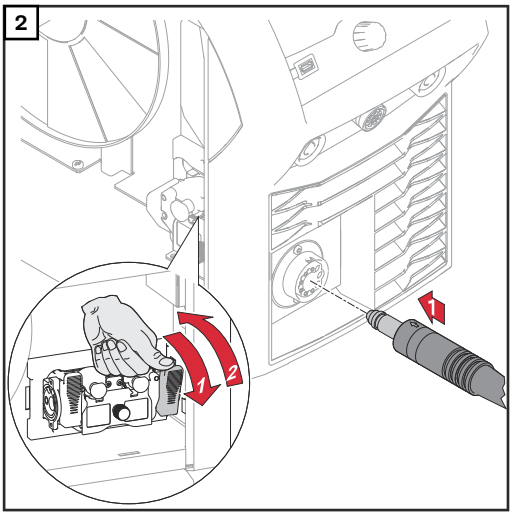
2
1
1
2

Inserting/replacing feed rollers

In order to achieve optimum wire electrode feed, the feed rollers must be suitable for the diameter and alloy of the wire being welded.

NOTE!

Only use feed rollers that match the wire electrode.
An overview of the feed rollers available and their potential application areas can be found in the Spare Parts Lists.

⚠ **CAUTION!**

Danger from feed roller holders flying upwards.
This can result in injuries.

▶ When unlocking the lever, keep fingers away from the area to the left and right of the lever.

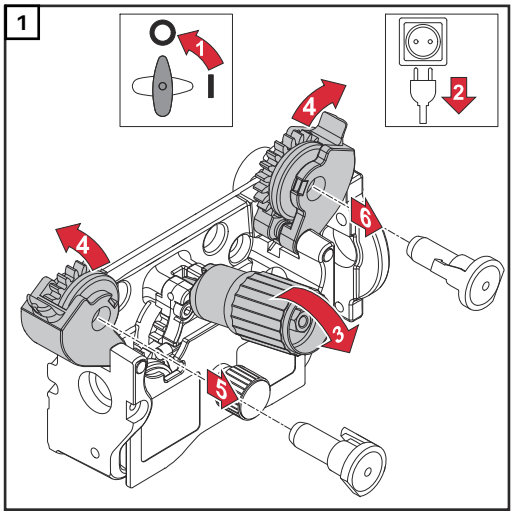

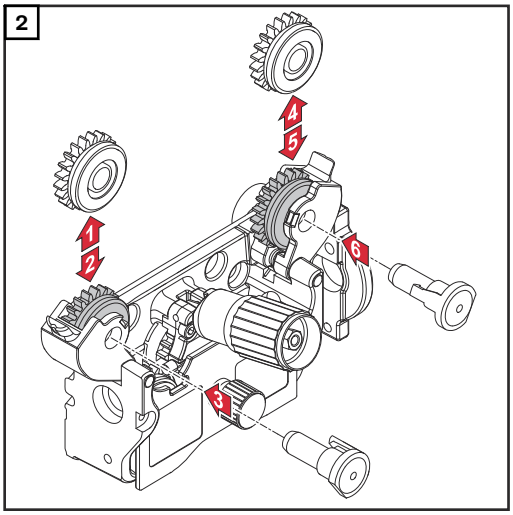

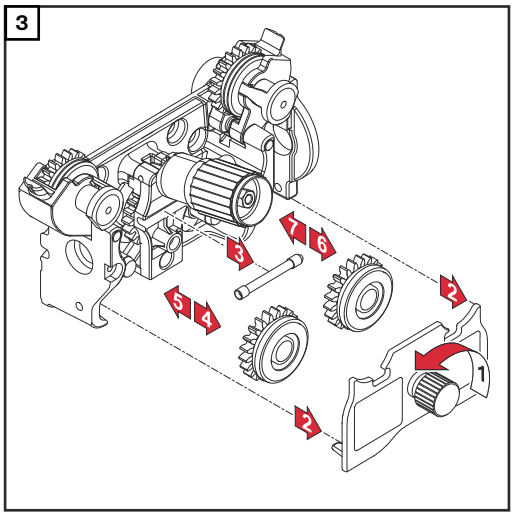

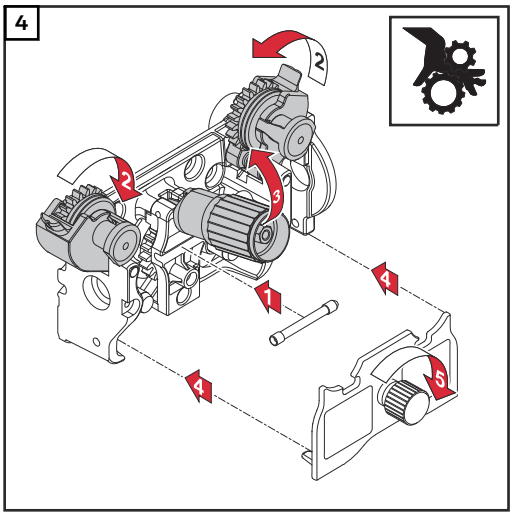

Inserting the wirespool

⚠ CAUTION!

Danger from springiness of spooled wire electrode.
This can result in injuries.
▶ While inserting the wirespool, hold the end of the wire electrode firmly to avoid injuries caused by the wire springing back.

⚠ CAUTION!

Danger of injury and damage from falling wirespool.
This can result in injuries.
▶ Make sure that the wirespool is fitted securely to the wirespool holder.

⚠ CAUTION!

Danger from the wirespool falling because the locking ring has been placed the wrong way around.
This can result in personal injury and function impairment.
▶ Always position the locking ring as shown in the diagram on the left.

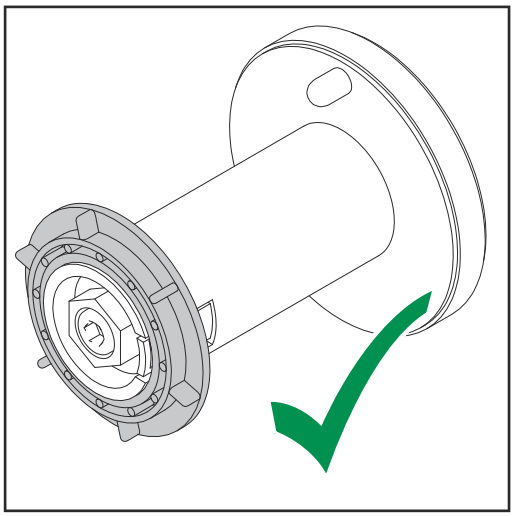

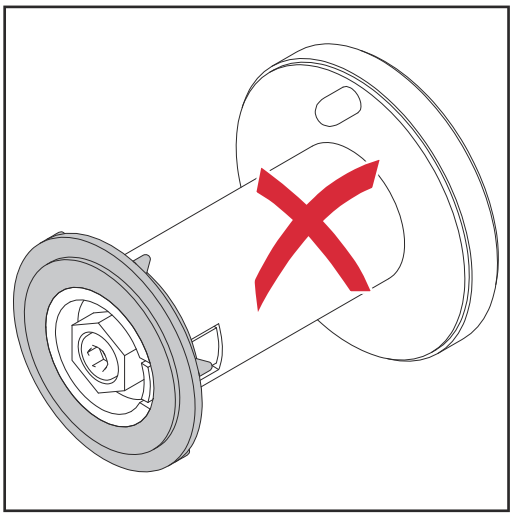

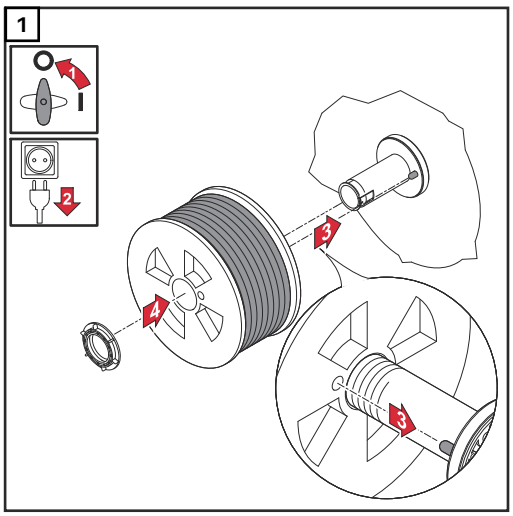

Inserting the basket-type spool

⚠ CAUTION!

Danger from springiness of spooled wire electrode.
This can result in injuries.
▶ While inserting the basket-type spool, hold the end of the wire electrode firmly to avoid injuries caused by the wire springing back.

⚠ CAUTION!

Danger from falling basket-type spool.
This can result in injuries.
▶ Make sure that the basket-type spool and basket-type spool adapter are fitted securely to the wirespool holder.

NOTE!

When working with basket-type spools, only use the basket-type spool adapter included in the scope of supply.

⚠ CAUTION!

Danger from falling basket-type spool.
This can result in injuries.
▶ Place the basket-type spool on the adapter provided in such a way that the bars on the spool are inside the adapter guideways.

⚠ CAUTION!

Danger from the basket-type spool falling because the locking ring has been placed the wrong way around.
This can result in personal injury and function impairment.
▶ Always position the locking ring as shown in the diagram on the left.

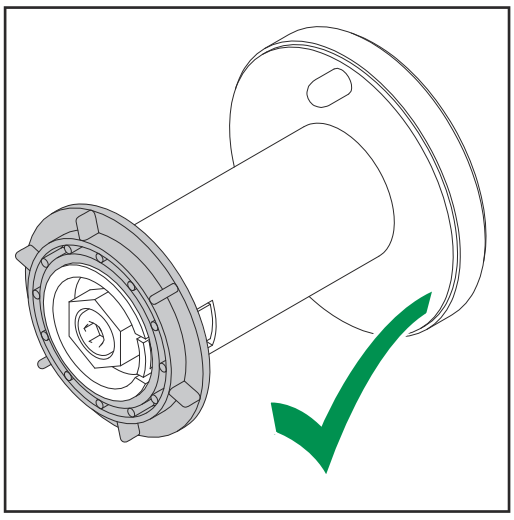

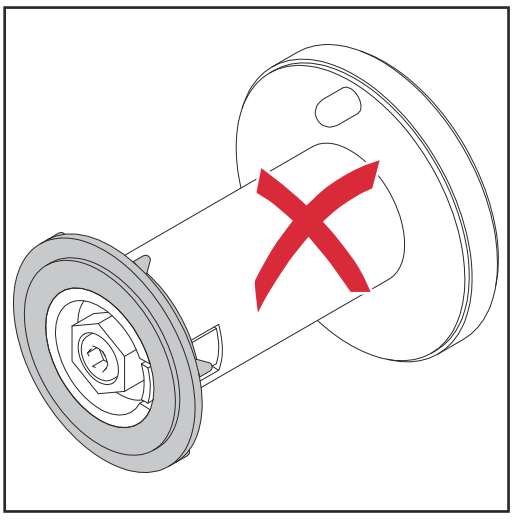

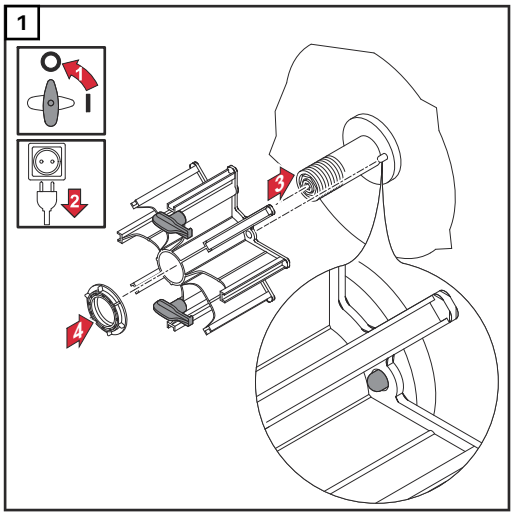

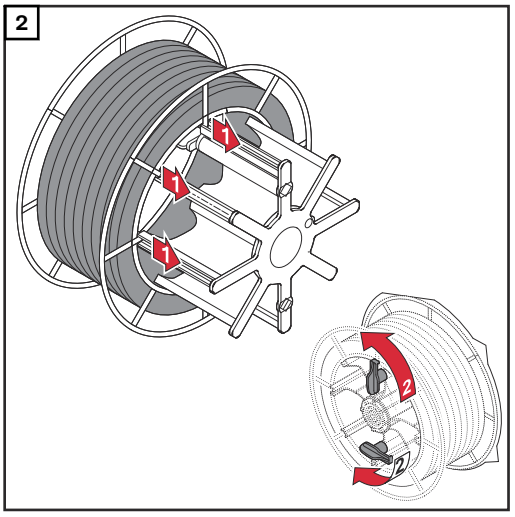

Feed in the wire electrode

⚠ CAUTION!

Danger from elasticity of the spooled wire electrode.
This can result in personal injury.

- ▶ Wear safety goggles.
- ▶ When inserting the wire spool/basket-type spool, hold the end of the wire electrode firmly to avoid injuries caused by the wire electrode springing back.

⚠ CAUTION!

Danger from sharp end of wire electrode.
This can damage the welding torch.

- ▶ Properly deburr the end of the wire electrode before threading in.
- ▶ Lay the torch hosepack as straight as possible.

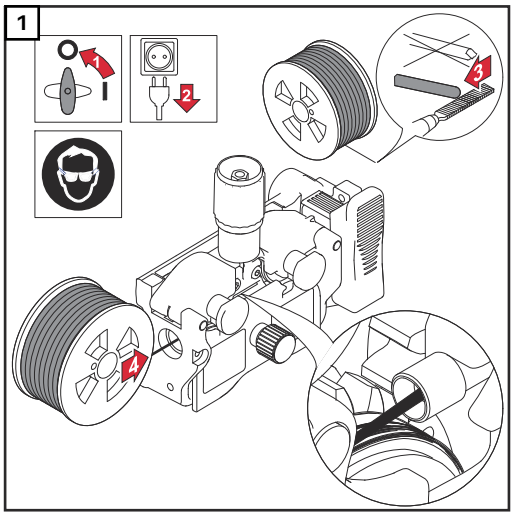

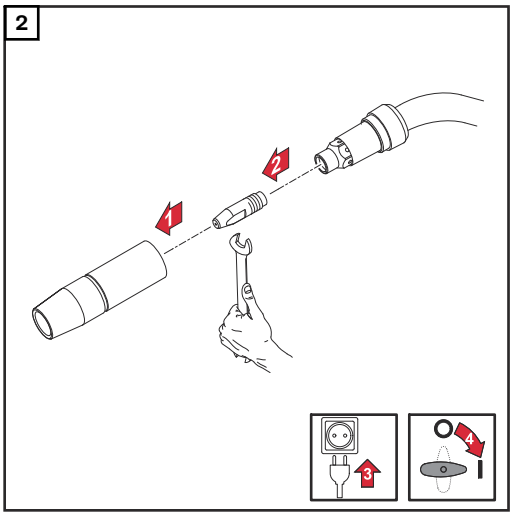

⚠ CAUTION!

Danger due to emerging wire electrode.
This can result in personal injury.

- ▶ Hold the welding torch with the end directed away from the face and body.
- ▶ Wear suitable protective goggles.
- ▶ Do not point the welding torch at people.
- ▶ Ensure that the wire electrode can only intentionally make contact with electrically conductive objects.

NOTE!

The wire electrode can be threaded by pressing a wire threading button present in the welding system or by pressing the torch trigger.

- ▶ The "Wire threading" dialogue window is shown on the display.

3

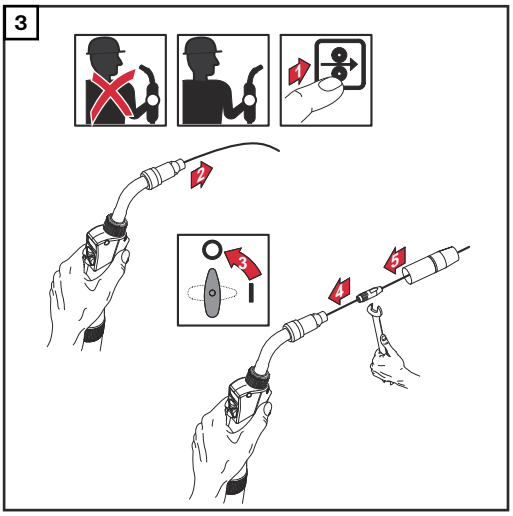

4

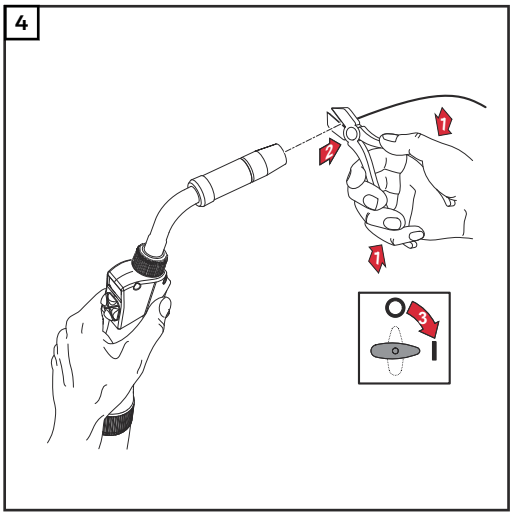

Notes on wire threading

If contact is made with the earth during wire threading, the wire electrode is automatically stopped.

When the torch trigger is pressed once, the wire electrode moves forwards 1 mm.

With a push wire feeding system:
If contact is made with the workpiece during threading, the wire play in the inner liner is measured. If the measurement is successful, a wire play value is entered in the event logbook, which is used to control the system.

Setting the contact pressure

NOTE!

Set the contact pressure in such a way that the wire electrode is not deformed but nevertheless ensures proper wirefeeding.

1

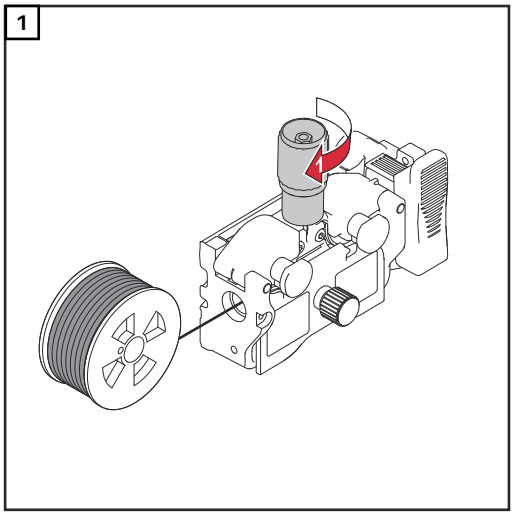

Contact pressure standard values for U-groove rollers

Steel:
4 - 5

CrNi
4 - 5

Tubular cored electrodes
2 - 3

Adjusting the brake

NOTE!

After releasing the torch trigger the wirespool should stop unreeling.
Adjust brake if necessary.

1

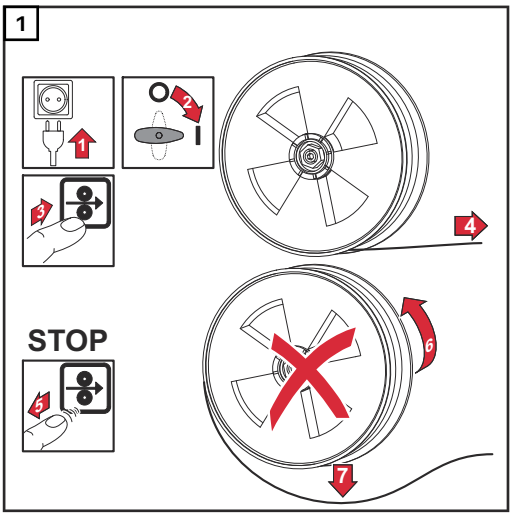

2

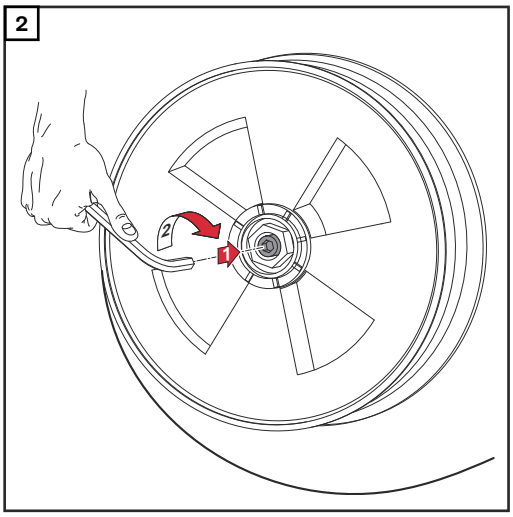

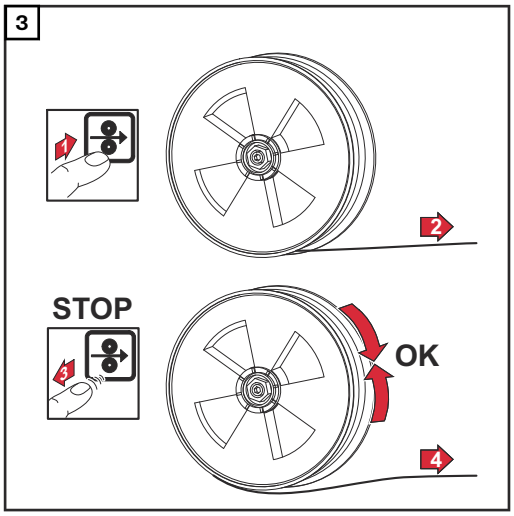

Design of the D300 brake

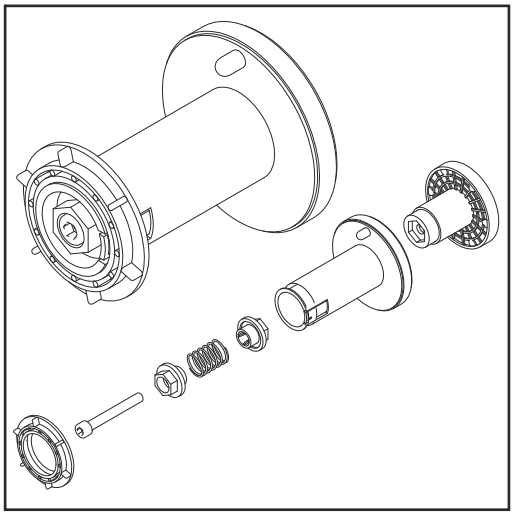

⚠ WARNING!

Danger from incorrect installation.
This can result in serious injury and damage to property.

- ▶ Do not dismantle the brake.
- ▶ Maintenance and servicing of brakes is to be carried out by trained, qualified personnel only.

The brake is only available as a complete unit.
The illustration of the brake is for information purposes only.

Performing R/L alignment

IMPORTANT! For optimum welding results, the manufacturer recommends performing an R/L alignment when starting the device for the first time and when any changes are made to the welding system.
More information about the R/L alignment can be found under "R/L alignment" in the "Process parameters" section of the "Welding mode" chapter (page 161).

Locking and unlocking the welding machine using the NFC key

General

NFC key = NFC card or NFC key ring

The welding machine can be locked using an NFC key, e.g. to prevent unauthorised access or welding parameters being changed without permission.

A contactless system on the control panel allows the welding machine to be locked and unlocked.

The welding machine must be switched on before it can be locked or unlocked.

Locking and unlocking the welding machine using the NFC key

Locking the welding machine



1 Hold the NFC key on the NFC key reader

The key symbol appears on the display.

The key symbol is then displayed in the status bar.



The welding machine is now locked.
Only the welding parameters can be viewed and adjusted using the adjusting dial.

Any attempt to access a locked function will result in a notification being displayed.

Unlocking the welding machine

1 Hold the NFC key on the NFC key reader

The crossed-out key symbol appears on the display.

The key symbol no longer appears in the status bar.
All welding machine functions are fully available again.

NOTE!

More information about locking and unlocking the welding machine can be found in the "Defaults - Management / Administration" chapter from page 205.

Welding

MIG/MAG modes

General

⚠ WARNING!

Danger from incorrect operation.
Possible serious injury and damage to property.
- ▶ Do not use the functions described here until you have read and completely understood these operating instructions.
- ▶ Do not use the functions described here until you have fully read and understood all of the operating instructions for the system components, in particular the safety rules!

See the Setup menu for information on settings, setting range and units of measurement for the available parameters.

Symbols and their explanations

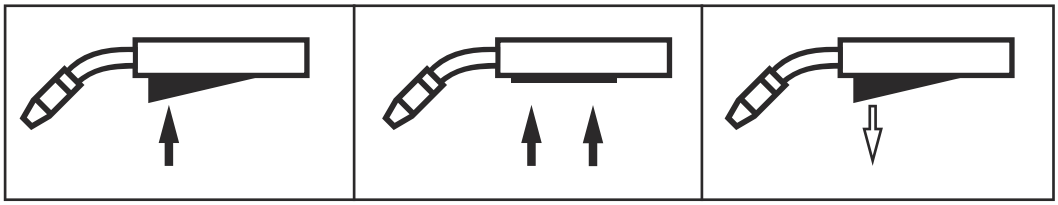

Press the torch trigger | Hold the torch trigger | Release the torch trigger

GPr
Gas pre-flow

I-S
Starting-current phase: the base material is heated up rapidly, despite the high thermal dissipation that occurs at the start of welding

t-S
Starting current time



Start arc length correction

SL1
Slope 1: the starting current is steadily lowered until it reaches the welding current

I
Welding-current phase: uniform thermal input into the base material, whose temperature is raised by the advancing heat

I-E
Final current phase: to prevent any local overheating of the base material due to heat build-up towards the end of welding. This eliminates any risk of weld seam drop-through.

t-E
Final current time

E

End arc length correction

SL2
Slope 2: the welding current is steadily lowered until it reaches the final current

GPo
Gas post-flow

SPt
Spot welding time

A detailed explanation of the parameters can be found in the section headed "Process parameters".

2-step mode



"2-step mode" is suitable for
- Tacking work
- Short weld seams
- Automated and robot welding

4-step mode



"4-step mode" is suitable for longer weld seams.

Special 4-step mode

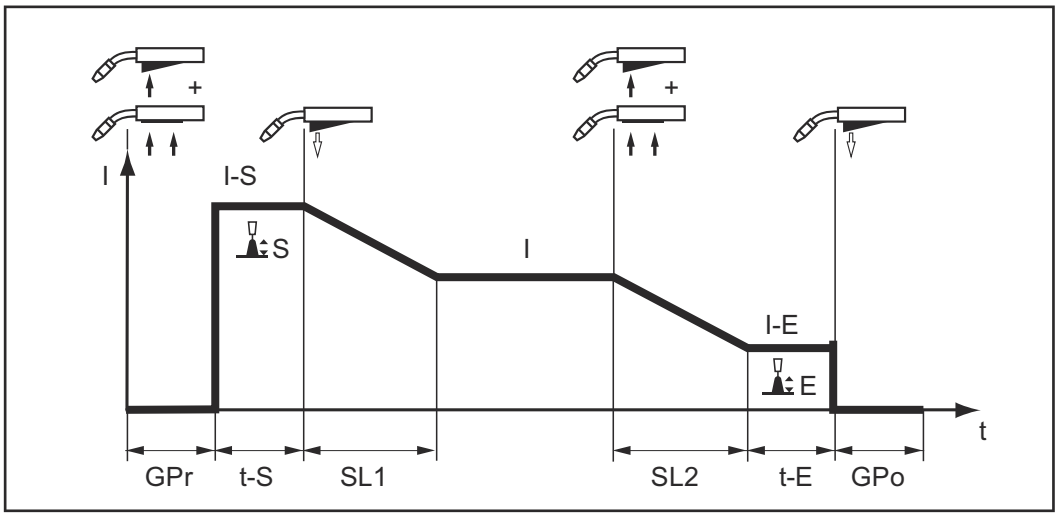

"Special 4-step mode" is particularly suitable for welding aluminium materials. The special slope of the welding current curve takes account of the high thermal conductivity of aluminium.

Special 2-step mode

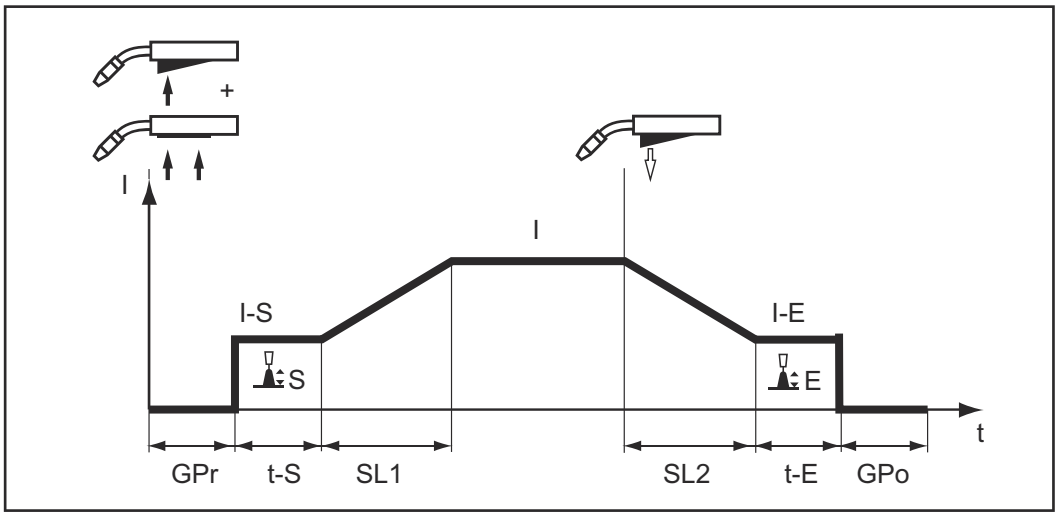

"Special 2-step mode" is ideal for welding in the higher power range. In special 2-step mode, the arc starts at a lower power, which makes it easier to stabilise.

Spot welding

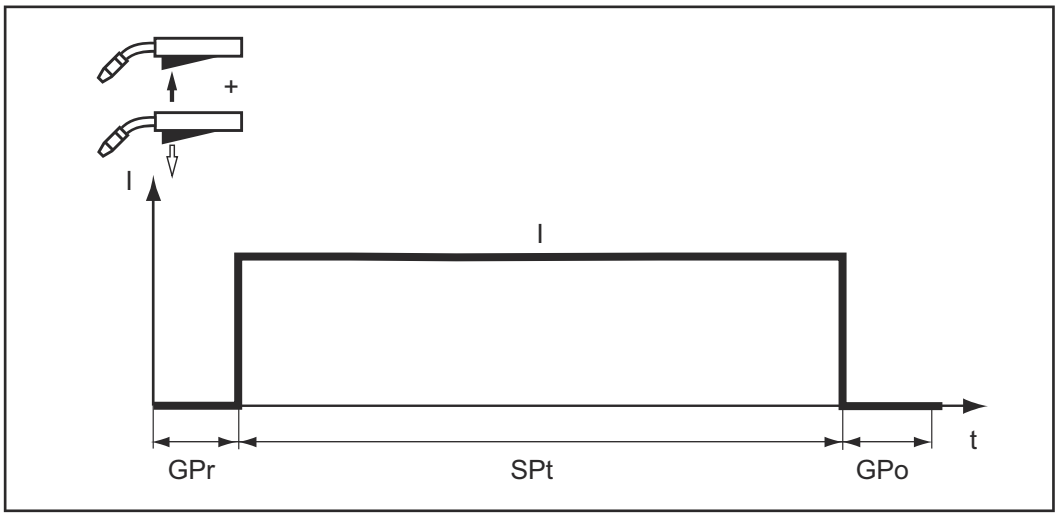

The "Spot welding" mode is suitable for welded joints on overlapped sheets.

MIG/MAG and CMT welding

Danger from incorrect operation and electric current

⚠ WARNING!

Danger due to incorrect operation and incorrectly performed work.
This can result in serious injury and damage to property.
- ▶ All the work and functions described in this document must only be carried out by technically trained and qualified personnel.
- ▶ Fully read and understand this document.
- ▶ Read and understand all safety rules and user documentation for this device and all system components.

⚠ WARNING!

Danger from electric current.
This can result in serious injury and damage to property.
- ▶ Before starting maintenance or servicing work, switch off all the devices and components involved and disconnect them from the mains.
- ▶ Secure all the devices and components involved to prevent unintentional restarting.
- ▶ After opening the device, use a suitable measuring instrument to check that electrically charged components (such as capacitors) have been discharged.

MIG/MAG and CMT welding – overview

The "MIG/MAG and CMT welding" section comprises the following steps:
- Switching on the welding machine
- Selecting the welding process and operating mode
- Selecting the filler metal and shielding gas
- Setting the welding and process parameters
- Setting the shielding gas flow rate
- MIG/MAG or CMT welding

NOTE!

If using a cooling unit, follow the safety rules and note the operating conditions in the cooling unit operating instructions.

Switching on the welding machine

1 Connect the mains cable
2 Move the mains switch to the "I" position

A cooling unit connected to the welding system will begin to operate.

IMPORTANT! For optimum welding results, the manufacturer recommends performing an R/L alignment when starting the device for the first time and when any changes are made to the welding system.
More information on R/L alignment can be found under "R/L alignment" in the MIG/MAG process parameters chapter (page 161).

Setting the welding process and operating mode via the status bar



1 In the status bar, select the symbol for the welding process

An overview of the welding processes is displayed.

NOTE!

The number and sequence of the displayed welding processes may vary depending on the device type, equipment and available Welding Packages.

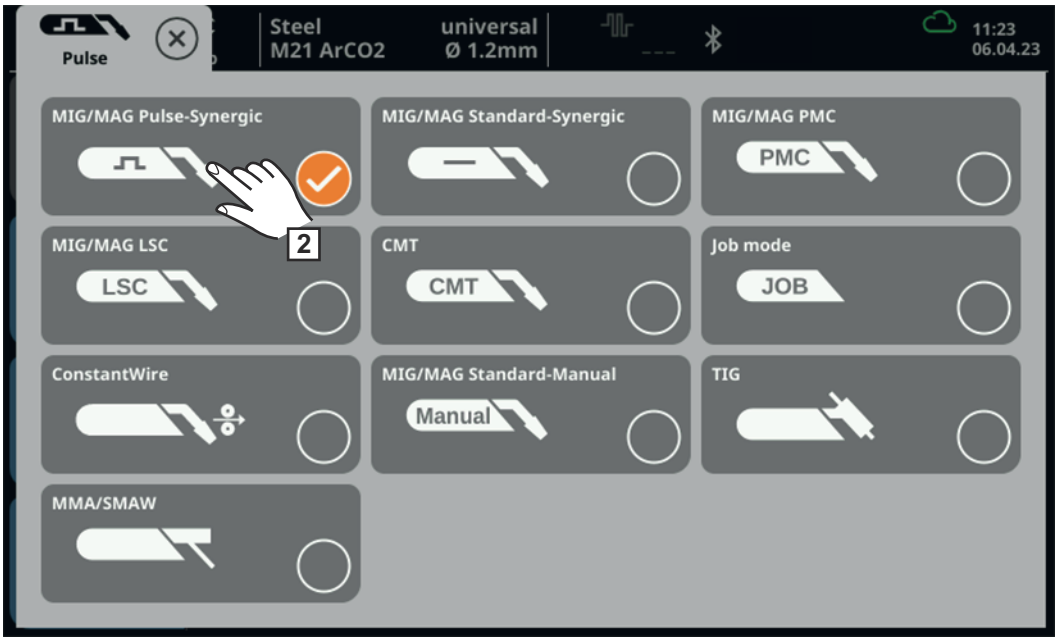

2 Select the desired welding process



3 In the status bar, select the symbol for the operating mode

An overview of the operating modes is displayed.

NOTE!

The number and sequence of the displayed operating modes may vary depending on the device type, equipment and available Welding Packages.

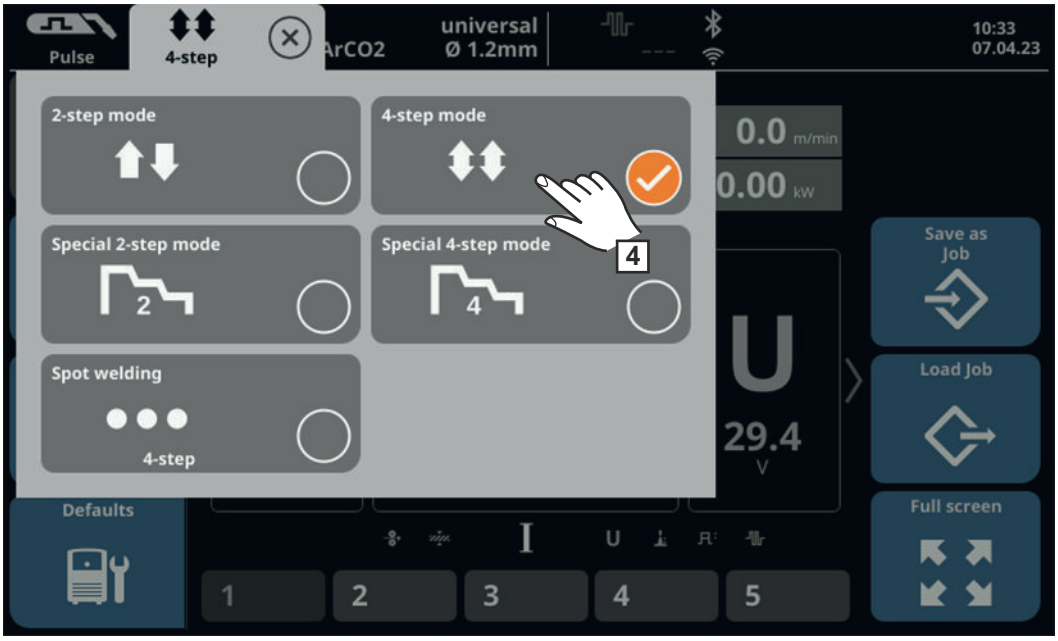

4 Select the desired operating mode

Setting the welding process and operating mode via the menu bar

Welding process and operating mode can alternatively be set via the menu bar.

NOTE!

The number and sequence of the displayed welding processes may vary depending on the device type, equipment and available welding packages.

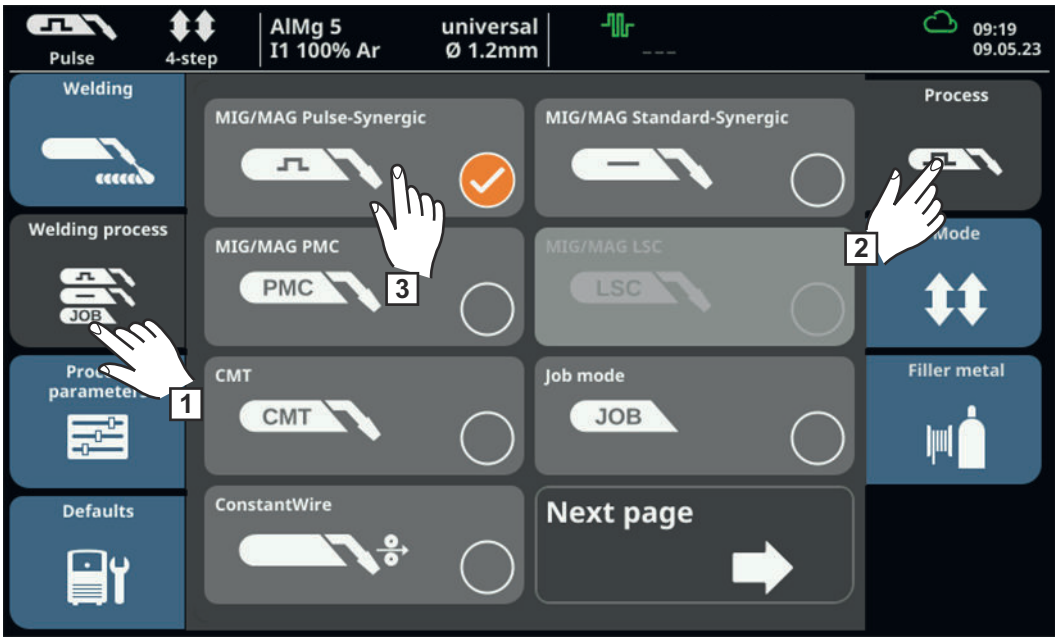

1 Select "Welding process"
2 Select "Process"

An overview of the welding processes is displayed.
Different welding processes are available depending on the model of welding machine or function packages installed.

3 Select the desired welding process

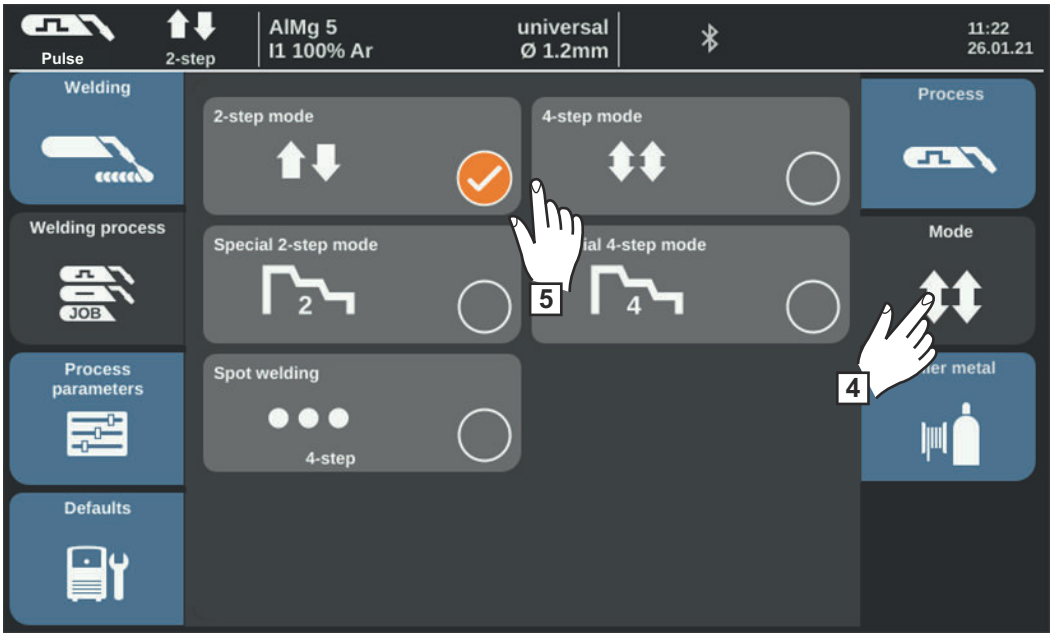

4 Select "Mode"

An overview of the operating modes is displayed:
- 2-step mode
- 4-step mode
- Special 2-step mode
- Special 4-step mode
- Spot welding

5 Select the desired operating mode

Selecting the filler metal and shielding gas

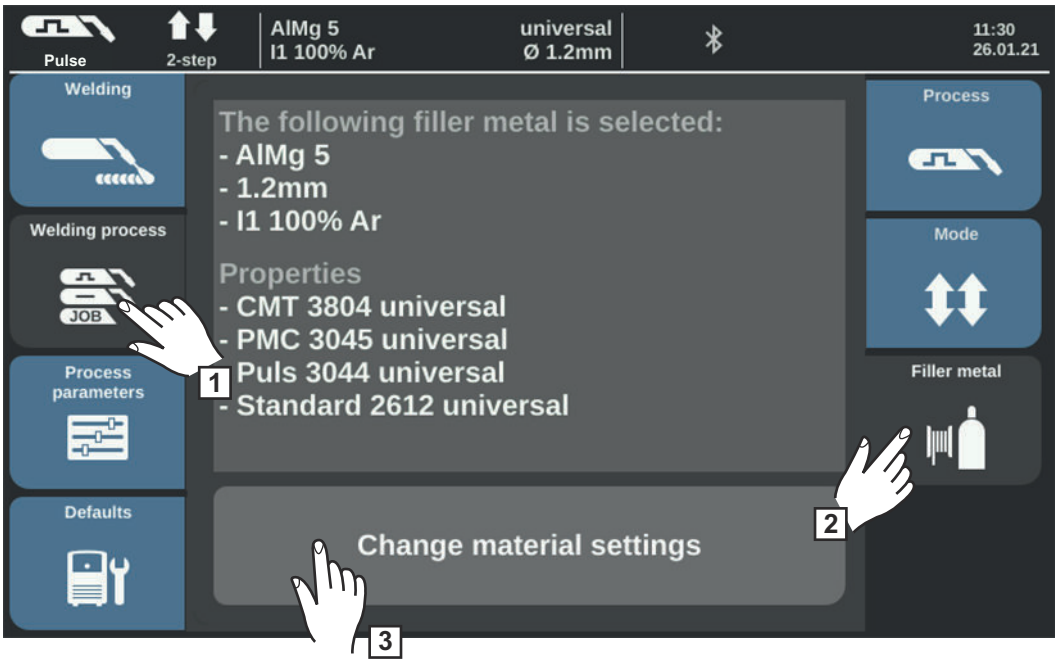

1 Select "Welding process"
2 Select "Filler metal"
3 Select "Change material settings"

4 Turn the adjusting dial and select the desired filler metal
5 Select "Next" / press the adjusting dial
6 Turn the adjusting dial and select the desired wire diameter
7 Select "Next" / press the adjusting dial
8 Turn the adjusting dial and select the desired shielding gas
9 Select "Next" / press the adjusting dial

NOTE!

The available characteristics per welding process are not displayed if only one characteristic is available for the selected filler metal.
In this case, the confirmation step of the filler metal wizard follows immediately; steps 10 - 14 do not apply.

10 Turn the adjusting dial and select the desired welding process
11 To select the desired characteristic, press the adjusting dial (blue background)
12 Turn the adjusting dial and select the desired characteristic
13 Press the adjusting dial and apply the selected characteristic (white background)
14 Select "Next"

The confirmation step of the filler metal wizard is displayed:

15 Select "Save" / press the adjusting dial

The selected filler metal and associated characteristics per welding process will be saved.

Setting the welding parameters

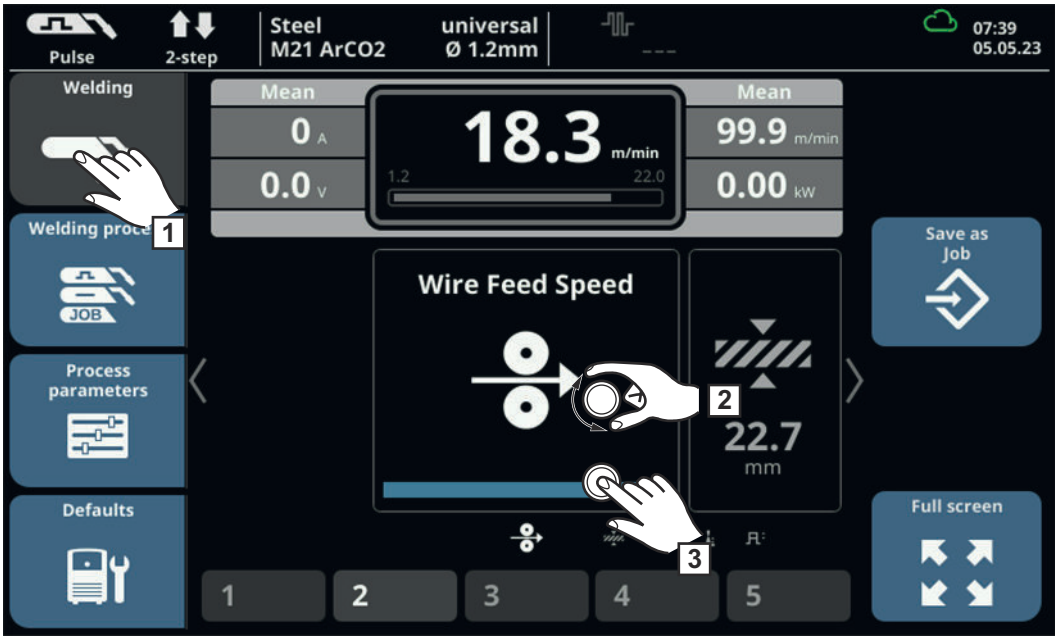

1 Select "Welding"
2 Select the desired welding parameter by turning the adjusting dial
3 Press the adjusting dial to change the parameter

The value of the parameter is displayed as a horizontal scale, the parameter is illustrated by means of an animated graphic:

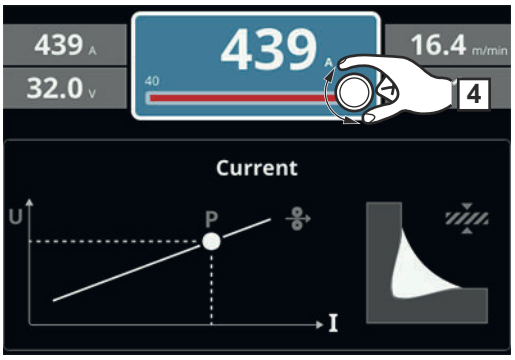

e.g. welding current parameter

The value of the selected parameter can now be changed.

4 Turn the adjusting dial to change the parameter

The adjusted value of the welding parameter is applied immediately.
If one of the "Wire speed", "Material thickness", "Current" or "Voltage" parameters is changed during synergic welding, the other welding parameters are immediately adjusted accordingly.

5 Press the adjusting dial to call up the welding parameters overview

6 Adjust the process parameters accordingly to make user or application-specific settings on the welding system

Set the shielding gas flow rate

1 Open the gas cylinder valve

2 Press the gas-test button

Gas flows out.
The "Gas purging" dialogue window appears on the display, indicating the remaining gas purging time. If there is a gas regulator or gas sensor in the welding system, the actual gas value is also displayed.

3 Turn the adjusting screw on the underside of the pressure regulator until the pressure gauge shows the required shielding gas flow rate

4 Press the gas-test button
The flow of gas stops.

MIG/MAG or CMT welding



1 Select "Welding" to display the welding parameters

⚠ CAUTION!

Danger due to emerging wire electrode.
This can result in personal injury.

- ▶ Hold the welding torch with the end directed away from the face and body.
- ▶ Wear suitable protective goggles.
- ▶ Do not point the welding torch at people.
- ▶ Ensure that the wire electrode can only intentionally make contact with electrically conductive objects.

2 Press the torch trigger and start welding

Each time at the end of welding, the welding data is saved depending on the setting; Hold or Mean is shown on the display (see also page 184).

NOTE!

Under certain circumstances, it may not be possible to change welding parameters that have been set on a system component (such as wirefeeder or remote control) from the control panel of the welding machine.

Spot and stitch welding

Spot welding

Spot welding is used on welded joints on overlapping sheets that are only accessible on one side.

1 Select the desired welding process:
- Via the status bar / Operating mode - see from page 102, work step 3
  or
- Via the menu bar - see from page 103

2 Activate spot welding:
1. In the status bar, select the symbol for the operating mode
2. Select Spot welding
   or
1. Select Welding process / Operating mode / Spot welding

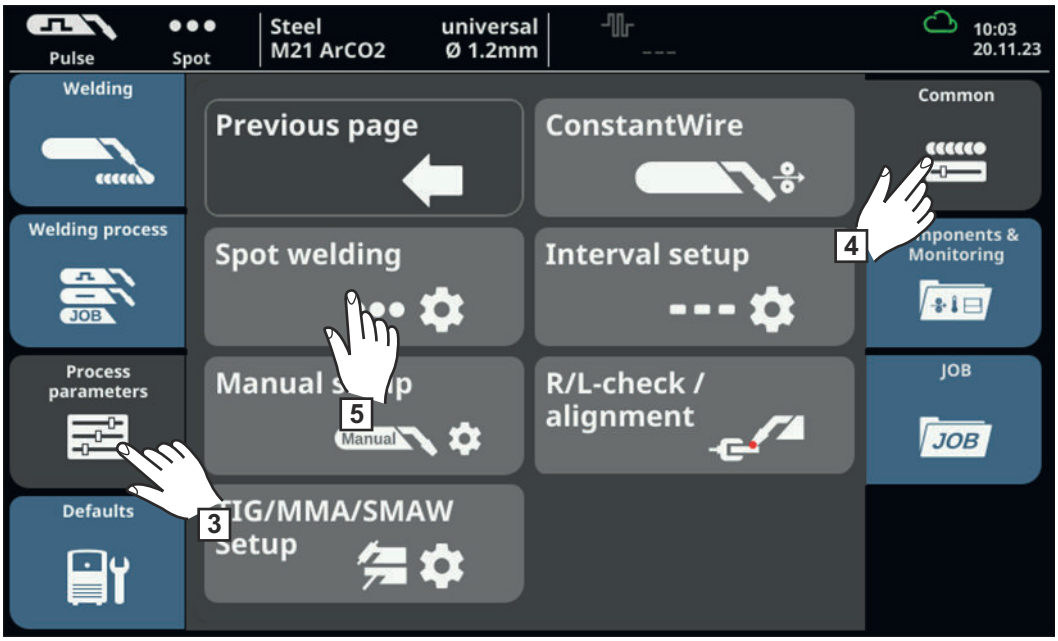

3 Select "Process parameters"

4 Select "Common"

5 Select "Spot welding"

The spot welding time parameter is displayed.

6 Enter the desired value for the spot welding time: Press and turn the adjusting dial

Setting range: 0.1 - 10.0 s
Factory setting: 1.0 s

7 Apply value by pressing OK

NOTE!

4-step mode is assigned as standard for spot welding.
Press the torch trigger - Spot welding process runs until the end of the spot welding time - Press again to stop the spot welding time prematurely

▶ The spot welding parameter can be changed to 2-step under Defaults / System / Mode Setup
(more information on 2-step and 4-step mode in spot welding starts on page 193)

8 Select the filler metal, wire diameter and shielding gas

9 Open the gas cylinder valve

10 Set the shielding gas flow rate

⚠ **CAUTION!**

Danger due to emerging wire electrode.
This can result in personal injury.

▶ Hold the welding torch with the end directed away from the face and body.
▶ Wear suitable protective goggles.
▶ Do not point the welding torch at people.
▶ Ensure that the wire electrode can only intentionally make contact with electrically conductive objects.

11 Spot welding

Procedure for producing a welding spot:

1 Hold the welding torch vertical

2 Press and release the torch trigger

3 Keep the welding torch in the same position

4 Wait for the gas post-flow time

5 Raise the welding torch

NOTE!

Pre-set start of welding and end of welding parameters are also active for spot welding.

▶ Start of welding / end of welding treatment for spot welding can be assigned under Process parameters / General MIG/MAG / Weld-Start/Weld-End.
▶ If the final current time is active, the end of welding is not after the pre-set spot welding time, but only once the pre-set slope and final current times have ended.

Stitch welding

1 Select the desired welding process:
- Via the status bar - see from page 102
  or
- Via the menu bar - see from page 103

2 Select the operating mode for stitch welding:
- Via the status bar - see from page 102
  or
- Via the menu bar - see from page 103

3 Select the filler metal, wire diameter and shielding gas

4 Set the desired welding parameters depending on the selected welding process

5 Activate stitch welding mode:
1. Select the process functions display in the status bar
2. Select interval
or
1. Under Process parameters / Common / Interval, set the Interval parameter to "on"

Stitch welding is activated, the interval indicator lights up in the status bar.

6 Set the other parameters for stitch welding:
stitch welding time, interval pause time, interval cycles

7 Open the gas cylinder valve

8 Set the shielding gas flow rate

⚠ CAUTION!

Danger due to emerging wire electrode.
This can result in personal injury.
- ▶ Hold the welding torch with the end directed away from the face and body.
- ▶ Wear suitable protective goggles.
- ▶ Do not point the welding torch at people.
- ▶ Ensure that the wire electrode can only intentionally make contact with electrically conductive objects.

9 Stitch welding

Procedure for stitch welding:

1 Hold the welding torch vertical

2 Depending on the selected mode:
press and hold the torch trigger (2-step mode)
press and release the torch trigger (4-step mode)

3 Keep the welding torch in the same position

4 Wait for the welding interval

5 Position the welding torch at the next point

6 To end stitch welding, depending on the selected mode:
release the torch trigger (2-step mode)
press and release the torch trigger (4-step mode)

7 Wait for the gas post-flow time

8 Raise the welding torch

Notes on stitch welding

With PMC characteristics, the setting of the SFI parameter influences the re-ignition behaviour in interval operation:

SFI = on
Re-ignition takes place with SFI.

SFI = off
Re-ignition takes place by means of touchdown ignition.

For aluminium alloys, SFI is always used for pulse and PMC ignition. SFI ignition cannot be deactivated.

If the SlagHammer function is stored on the selected characteristic, faster and more stable SFI ignition takes place in conjunction with a CMT drive unit and a wire buffer.

MIG/MAG and CMT welding parameters

Welding parameters for MIG/MAG pulse synergic welding and PMC welding

The following welding parameters for MIG/MAG pulse synergic welding and PMC welding can be set and displayed by selecting "Welding":

Wire speed [1]

0.5 - max. [2] [3] m/min / 19.69 - max [2] [3] ipm.

Material thickness [1]

0.1 - 30.0 mm [2] / 0.004 - 1.18 [2] in.

Current [1] **[A]**

Setting range: depends on the welding process and welding program selected

Before the start of welding, the device automatically displays a standard value based on the programmed parameters. The actual value is displayed during welding.

Arc length correction
for correcting the arc length;

-10 - +10
Factory setting: 0

- ... shorter arc length
0 ... neutral arc length
+ ... longer arc length



If the arc length correction is adjusted, the welding voltage changes, but the welding current and wire speed remain the same.

On the display, the voltage value with unchanged arc length correction (1), the voltage value corresponding to the currently set arc length correction (2) and the symbol of an active arc length correction (3) are displayed.

NOTE!

For certain PMC characteristics, the arc length correction cannot be adjusted when the arc length stabilizer is active.

▶ The arc length correction is then not displayed in the welding parameters.

Pulse correction
For correcting the pulsing energy of a pulsed arc

-10 - +10
Factory setting: 0

- ... lower droplet detachment force
0 ... neutral droplet detachment force
+ ... increased droplet detachment force

NOTE!

SynchroPulse can be activated via the status bar.
(See page 45)
▶ If SynchroPulse is activated, the SynchroPulse parameters are also displayed with the welding parameters.

Welding parameters for MIG/MAG standard synergic welding, LSC welding and CMT welding

The following welding parameters for MIG/MAG standard synergic welding, LSC welding and CMT welding can be set and displayed by selecting the "Welding" menu button:

Wire speed [1)]

0.5 - max. [2) 3)] m/min / 19.69 - max [2) 3)] ipm.

Material thickness [1)]

0.1 - 30.0 mm [2)] / 0.004 - 1.18 [2)] in.

Current [1)] **[A]**

Setting range: depends on the welding process and welding program selected

Before the start of welding, the device automatically displays a standard value based on the programmed parameters. The actual value is displayed during welding.

Arc length correction
for correcting the arc length;

-10 - +10
Factory setting: 0

- ... shorter arc length
0 ... neutral arc length
+ ... longer arc length

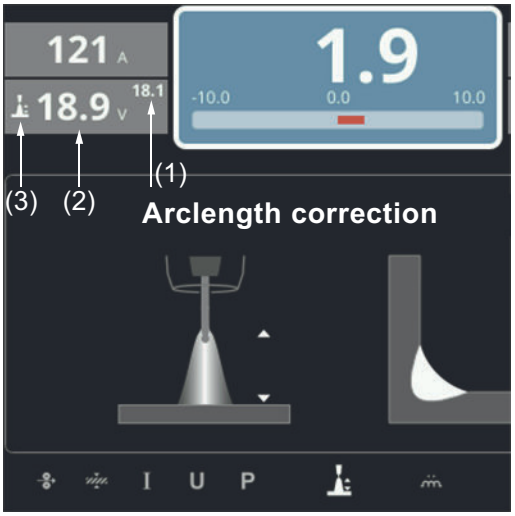

If the arc length correction is adjusted, the welding voltage changes, but the welding current and wire speed remain the same.

On the display, the voltage value with unchanged arc length correction (1), the voltage value corresponding to the currently set arc length correction (2) and the symbol of an active arc length correction (3) are displayed.

NOTE!

For certain PMC characteristics, the arc length correction cannot be adjusted when the arc length stabilizer is active.

▶ The arc length correction is then not displayed in the welding parameters.

Dynamic correction
for setting the short circuit current and the current to short-circuit break-up

-10 - +10
Factory setting: 0

-10
harder arc (higher current in case of short-circuit break-up, increased welding spatter)

+10
softer arc (lower current in case of short-circuit break-up, less welding spatter forms)

NOTE!

SynchroPulse can be activated via the status bar.
(See page 45)

▶ If SynchroPulse is activated, the SynchroPulse parameters are also displayed with the welding parameters.

Welding parameters for MIG/MAG standard manual welding

The following welding parameters for MIG/MAG standard manual welding can be set and displayed by selecting the "Welding" menu button:

Voltage [1] [V]

Setting range: depends on the welding process and welding program selected

Before the start of welding, the device automatically displays a standard value based on the programmed parameters. The actual value is displayed during welding.

Wire speed [1]
for setting a harder, more stable arc

0.5 - max. [2] m/min / 19.69 - max [2] ipm.

Arc-force dynamic
to influence the short-circuiting dynamic at the instant of droplet transfer

0 - 10
Factory setting: 1.5

0 ... harder and more stable arc
10 ... soft and low-spatter arc

Explanation of footnotes

1) Synergic parameter
When a synergic parameter is changed, the synergic function automatically changes all other synergic parameters to match.

The actual setting range depends on the welding machine and wirefeeder used and on the welding program selected.

2) The actual setting range depends on the welding program selected.

3) The maximum value depends on the wirefeeder used.

EasyJob mode

General

If EasyJob mode has been activated, 5 additional buttons appear on the display. These enable up to 5 operating points to be saved at the touch of a button. The current welding settings are saved.

If there is a robot interface in the welding system, the EasyJob buttons are not displayed, the EasyJob mode is greyed out and cannot be activated.

Activating Easy-Job mode



1 Select Defaults / View / EasyJobs

The overview to activate/deactivate EasyJob mode is displayed.

4 Select "EasyJobs on"
5 Select "OK"

EasyJob mode is activated and the default settings are displayed.

6 Select "Welding"

Five EasyJob buttons are displayed for the welding parameters.

Storing EasyJob operating points

NOTE!

The EasyJobs are stored under job numbers 1 - 5 and can also be retrieved using "Job mode".

Storing an EasyJob overwrites any other job saved under the same number!

1 To store the current welding settings, touch one of the EasyJob buttons for about three seconds

The size and colour of the button changes. After about three seconds, the button is displayed green with a frame.

The settings have now been stored. The most recently stored settings will be active. An active EasyJob is shown with a tick on the EasyJob button.
Unoccupied EasyJob buttons are shown in dark grey.
For occupied EasyJobs, the button number is shown in white.

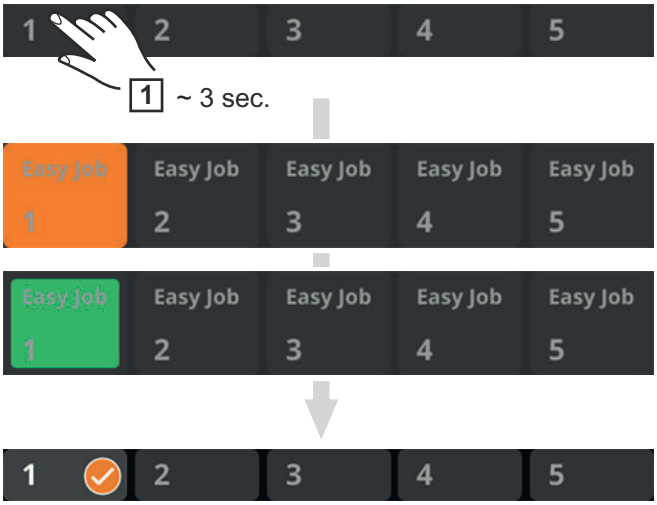

Retrieving EasyJob operating points

1 To retrieve a saved EasyJob operating point, touch the corresponding EasyJob button briefly (< 3 seconds)

The size and colour of the button changes briefly; it is then displayed with a tick.



If a tick is not displayed after touching an EasyJob button, this means that there is no operating point saved under this button.

Deleting EasyJob operating points

1 To delete an EasyJob operating point, touch the relevant EasyJob button for approximately 5 seconds

The button
- First changes its size and colour;
- Is displayed with a frame after about 3 seconds;
  The saved operating point is overwritten with the current settings.
- Is highlighted in red (= delete) after a total of 5 seconds.

The EasyJob operating point has been deleted.

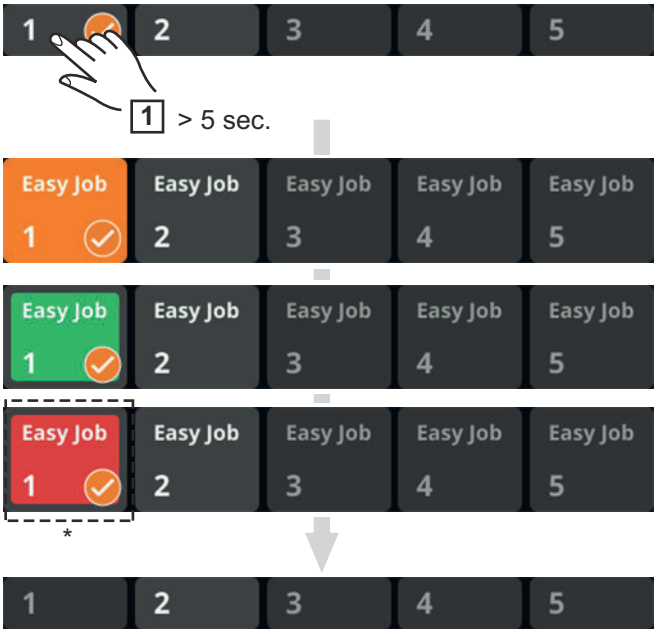

* ... highlighted in red

Loading more EasyJobs

With this function, any stored job can be loaded as an EasyJob in the welding menu without switching to Job Mode.

1 Select Defaults / View / EasyJobs

The overview to activate/deactivate EasyJob mode is displayed.

2 Select "Load more EasyJobs"
3 Select "OK"

EasyJob mode is activated and the default settings are displayed.

4 Select "Welding"

In the welding parameters, the "Load Job" button is also displayed in the right-hand menu bar.



5 Select "Load Job"

The list of stored jobs is displayed.

6 Use the adjusting dial to select the desired job

7 Select "Load" or press the adjusting dial

The job is loaded in the welding menu, the welding machine is not in Job Mode.

Job mode

General

Up to 1000 jobs can be stored and reproduced on the welding machine.
This eliminates the need to manually document the welding parameters.
Job Mode thereby increases the quality of automated and manual applications.

Jobs can only be stored when in welding mode. When storing jobs, the process parameters and certain machine defaults are taken into account in addition to the present welding settings.

Storing settings as a job

1 Set the parameters that are to be stored as a job:
- Welding parameters
- Welding process
- Process parameters
- Machine defaults (if necessary)



2 Select "Save as Job"

The job list is displayed.

To overwrite an existing job, select it by turning and pressing the adjusting dial (or selecting "Next").
The selected job can be overwritten after acknowledging the confirmation prompt.

Select "Create a new Job" to create a new job

3 Press the adjusting dial / select "Next"

The next free job number is displayed.

4 Turn the adjusting dial and select the desired storage location

5 Press the adjusting dial / select "Next"

The keyboard is displayed.

6 Enter a job name

7 Select "OK" and confirm the job name / press the adjusting dial

The name is saved and a confirmation that the job has been stored is displayed.

8 To exit, select "Finish" / press the adjusting dial

Job welding - retrieving a job

NOTE!

Before retrieving a job, make sure that the welding system has been installed and set up for the job.

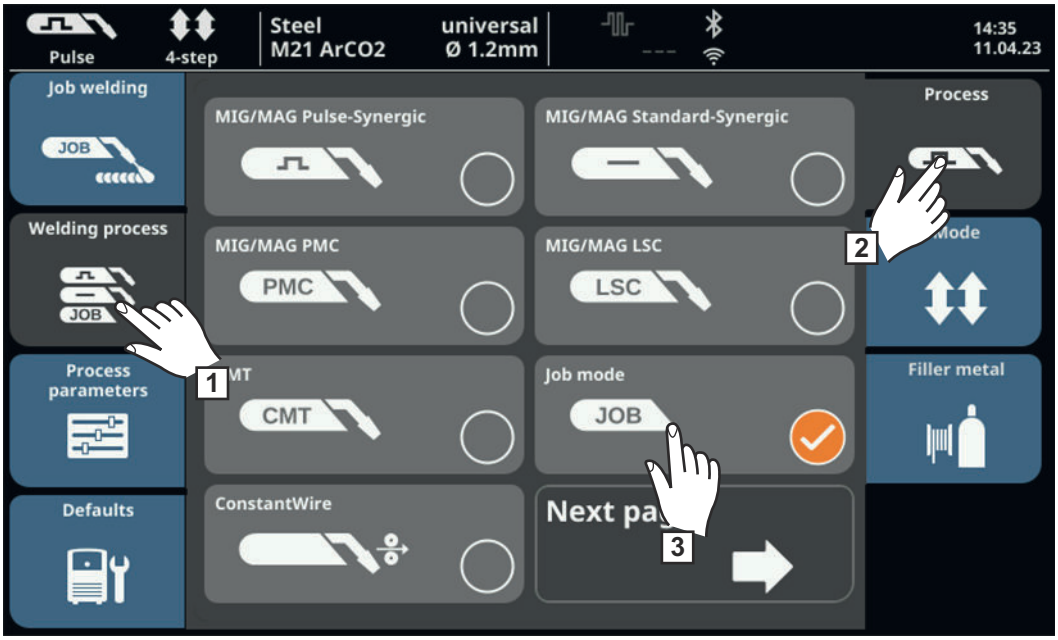

1 Select "Welding process"

2 Select "Process"

Alternatively, the welding process can also be selected via the status bar (compare with the selection described from page 102).

3 Select "Job mode"

Job mode is activated.
"Job welding" and the data from the most recently retrieved job are displayed.

4 Select "Job welding"

5 Press the adjusting dial twice or touch the job number displayed under the status bar (white background, job number is highlighted in blue)

6 Turn the adjusting dial and select the desired job

7 Press the adjusting dial and apply the selected job (white background)

8 Start welding

IMPORTANT! "Job" is the only parameter that can be altered in Job Mode; all the other welding parameters are read-only.

Renaming a job



1 Select "Save as Job"
(also works in Job Mode)

The job list is displayed.

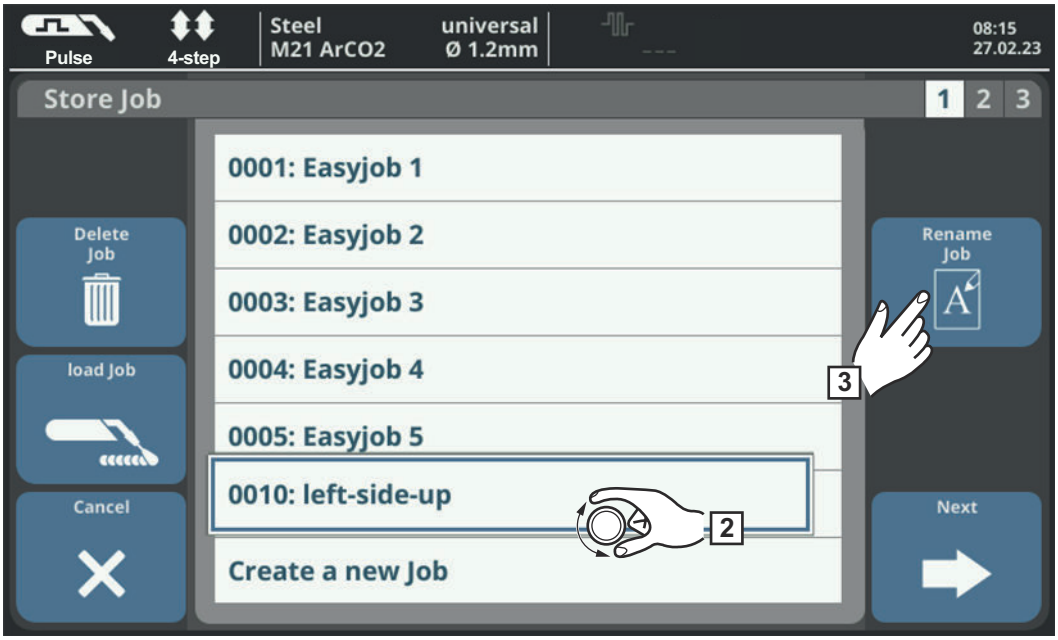

2 Turn the adjusting dial and select the job to be renamed
3 Select "Rename Job"

The keyboard is displayed.

4 Change the job name using the keyboard
5 Select "OK" and confirm the amended job name / press the adjusting dial

The job name is changed and the job list is displayed.

6 To exit, select "Cancel"

NOTE!

As an alternative to the procedure described above, the job can also be renamed in the process parameters:

▶ Process parameters / Job / Optimize job / Rename job

Deleting a job



[1] Select "Save as Job"
(also works in Job Mode)

The job list is displayed.

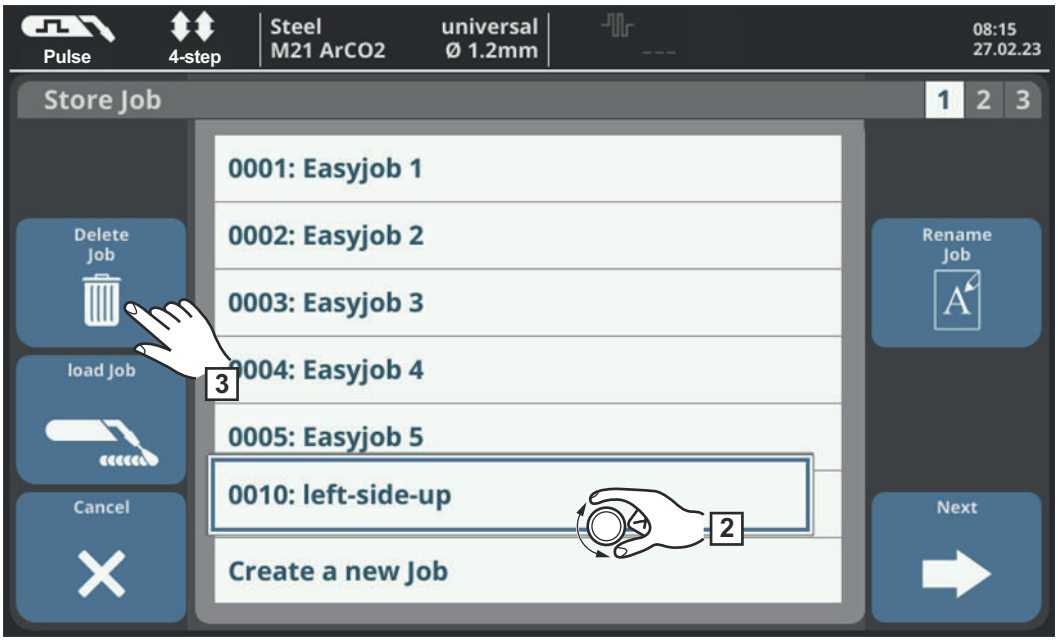

[2] Turn the adjusting dial and select the job to be deleted

[3] Select "Delete Job"

A confirmation prompt asking whether you really want to delete the job is displayed.

4 Select "Yes" to delete the selected job

The job is deleted, the job list is displayed.

5 To exit, select "Cancel"

NOTE!

As an alternative to the procedure described above, the job can also be deleted in the process parameters:

▶ Process parameters / Job / Optimize job / Delete job

Loading a job

The load job function can be used to load the data for a saved job or an EasyJob to the welding screen. The relevant data from the job is displayed in the welding parameters and can be changed, saved as a new job or EasyJob, or used to start welding.



1 Select "Save as Job"
(also works in Job Mode)

The job list is displayed.

2 Turn the adjusting dial and select the job to be loaded

3 Select "Load job"

The load job information is shown.

4 Select "Yes"

The data for the selected job is loaded onto the welding screen.

The data for the loaded job can now be used for welding (no job mode), changed, or be saved as a new job or an EasyJob.

Optimising a job

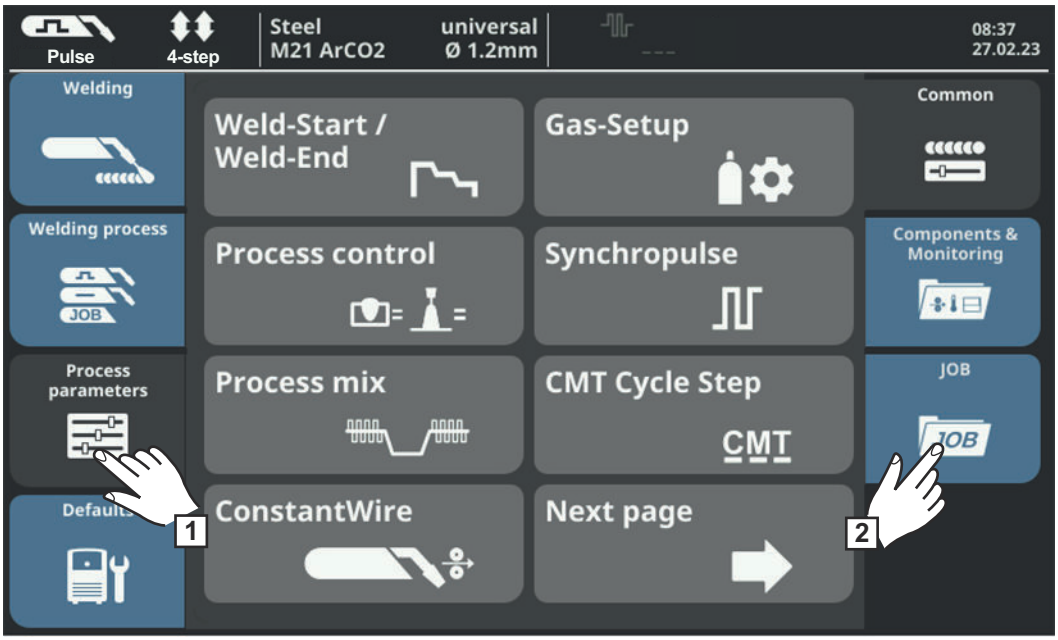

1 Select "Process parameters"

2 Select "JOB"

An overview of the job functions is displayed.

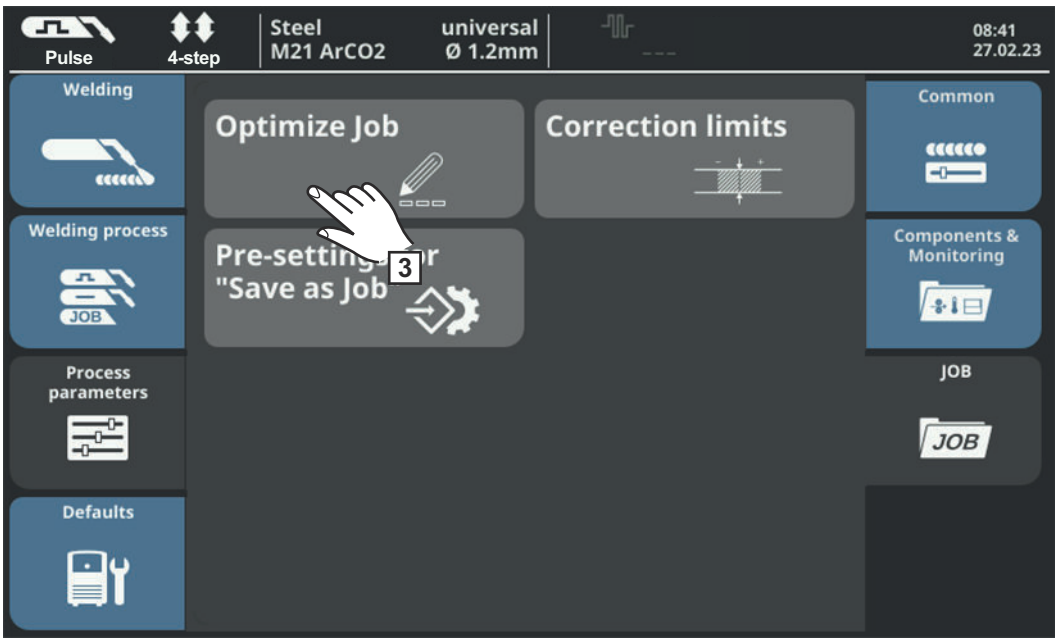

3 Select "Optimize Job"

The overview of the most recently optimised job is displayed.

4 Turn the adjusting dial and select either the job or the job welding parameters to be modified

You can also select between the job and the job welding parameters by touching the "Job number / Job parameter" button.



Select job:
- Press the adjusting dial

  The job number is highlighted in blue and can now be changed.

- Turn the adjusting dial to select the job to be altered
- Press the adjusting dial to change the job

Select job welding parameters:
- Turn the adjusting dial and select the parameter to be changed
- Press the adjusting dial

  The value of the parameter is highlighted in blue and can now be changed.

- Turn the adjusting dial; the amended value is applied immediately
- Press the adjusting dial to select other parameters

5 Select "Finish"

Setting correction limits for a job

Individual correction limits for welding power and arc length can be defined for each job.
If correction limits are defined for a job, the welding power and arc length for the job in question can be corrected within the defined limits while welding.



1 Select "Process parameters"

2 Select "JOB"

An overview of the job functions is displayed.

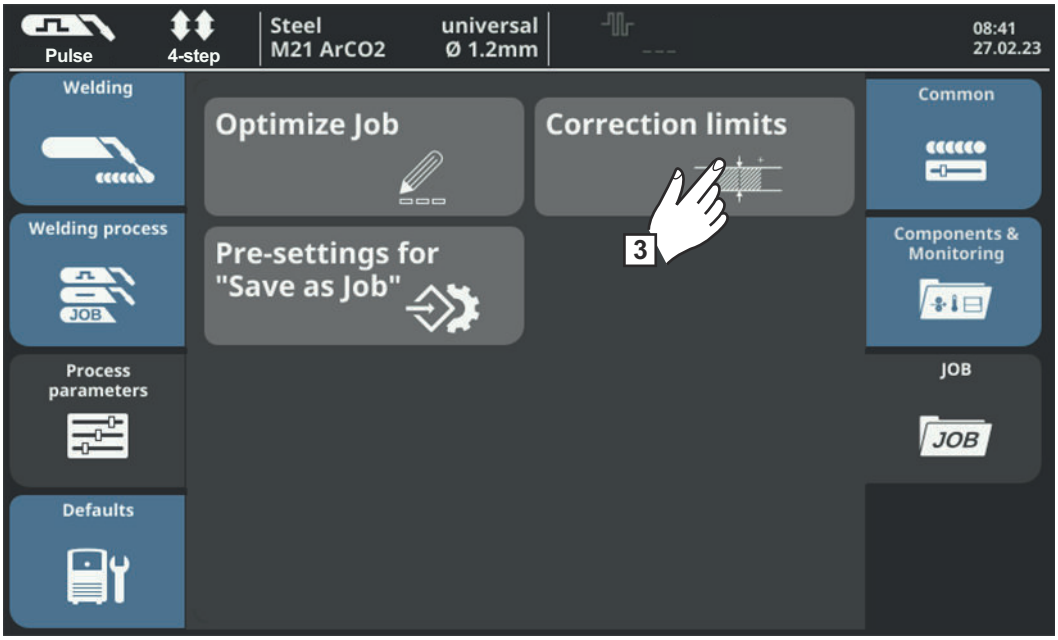

3 Select "Correction limits"

A list of the job correction limits for the last job opened is displayed.

4 Turn the adjusting dial and select either the job or the job limits to be modified

You can also select between the job and job limits by touching the "Job number / Job parameter" button.



Select job:
- Press the adjusting dial

  The job number is highlighted in blue and can now be changed.

- Turn the adjusting dial to select the job to be altered
- Press the adjusting dial to change the job

Select job limits:
- Turn the adjusting dial and select the desired limit group
- Press the adjusting dial

  The selected limit group opens.

- Turn the adjusting dial and select the top or bottom limit
- Press the adjusting dial

  The value of the limit parameter is highlighted in blue and can now be changed.

- Turn the adjusting dial; the amended value is applied immediately
- Press the adjusting dial to select other limit parameters

5 Select "Finish"

Pre-settings for "Save as Job"

Pre-settings for "Save as Job" are used to set the default values that are assumed for every newly created job.

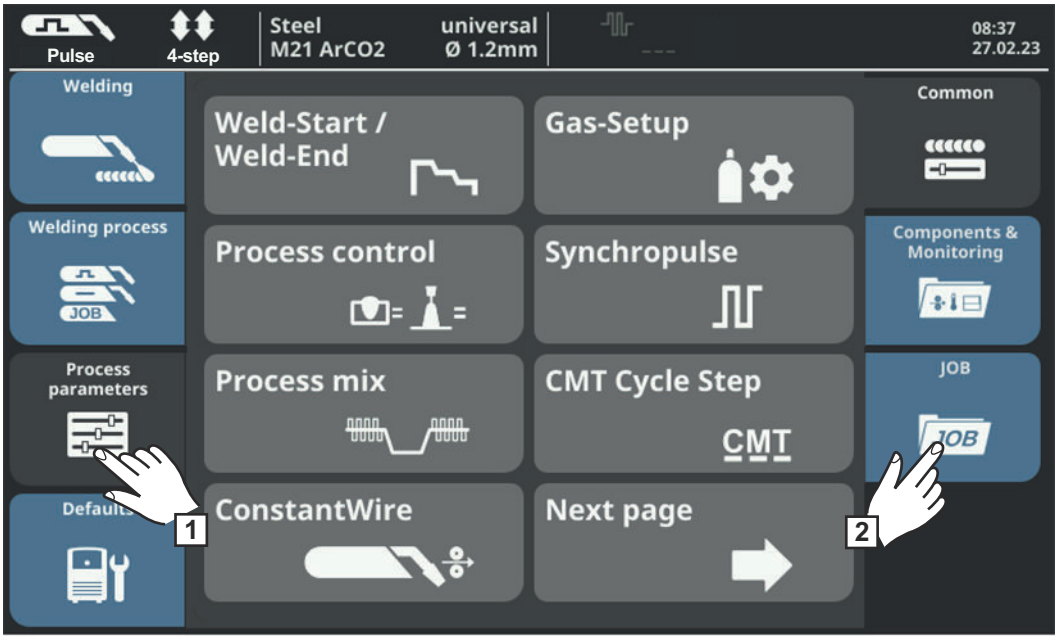

1 Select "Process parameters"
2 Select "JOB"

An overview of the job functions is displayed.

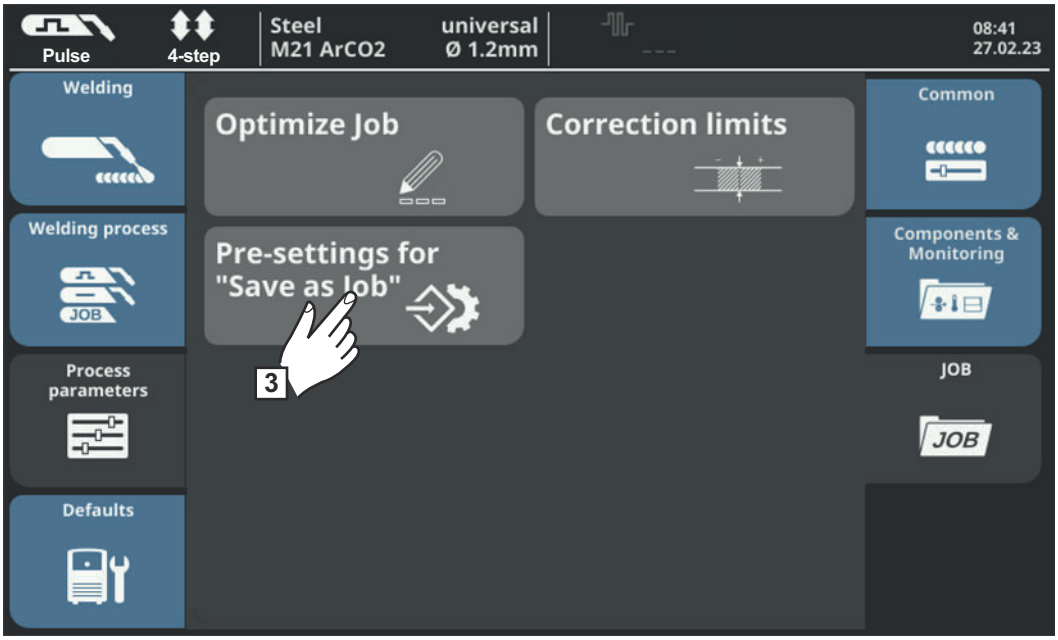

3 Select "Pre-settings for "Save as Job""
4 Confirm the displayed information

The default settings for saving new jobs are displayed.

5 Turn the adjusting dial and select the desired parameter

6 Press the dial
7 Turn the adjusting dial and change the value
8 Press the dial
9 Select "Finish"

TIG welding

Danger from incorrect operation and electric current

⚠ WARNING!

Danger due to incorrect operation and incorrectly performed work.
This can result in serious injury and damage to property.
- ▶ All the work and functions described in this document must only be carried out by technically trained and qualified personnel.
- ▶ Fully read and understand this document.
- ▶ Read and understand all safety rules and user documentation for this device and all system components.

⚠ WARNING!

Danger from electric current.
This can result in serious injury and damage to property.
- ▶ Before starting maintenance or servicing work, switch off all the devices and components involved and disconnect them from the mains.
- ▶ Secure all the devices and components involved to prevent unintentional restarting.
- ▶ After opening the device, use a suitable measuring instrument to check that electrically charged components (such as capacitors) have been discharged.

Preparations

1. Move the mains switch to the "O" position
2. Disconnect the mains plug
3. Remove the MIG/MAG welding torch
4. Disconnect the grounding (earthing) cable from the (-) current socket
5. Plug the grounding (earthing) cable into the 2nd (+) current socket and twist to fasten it
6. Use the other end of the grounding (earthing) cable to establish a connection to the workpiece
7. Plug the bayonet current plug on the TIG gas-valve torch into the (-) current socket and twist it clockwise to fasten it
8. Screw the pressure regulator onto the (argon) gas cylinder and tighten it
9. Connect the gas hose of the TIG gas-valve torch to the pressure regulator
10. Plug in the mains plug

TIG welding

⚠ CAUTION!

Risk of injury and damage from electric shock.
As soon as the mains switch is in the "I" position, the tungsten electrode of the welding torch is live.

▶ Ensure that the tungsten electrode does not touch any persons or electrically conductive or earthed parts (e.g. housing, etc.).

1 Move the mains switch to the "I" position

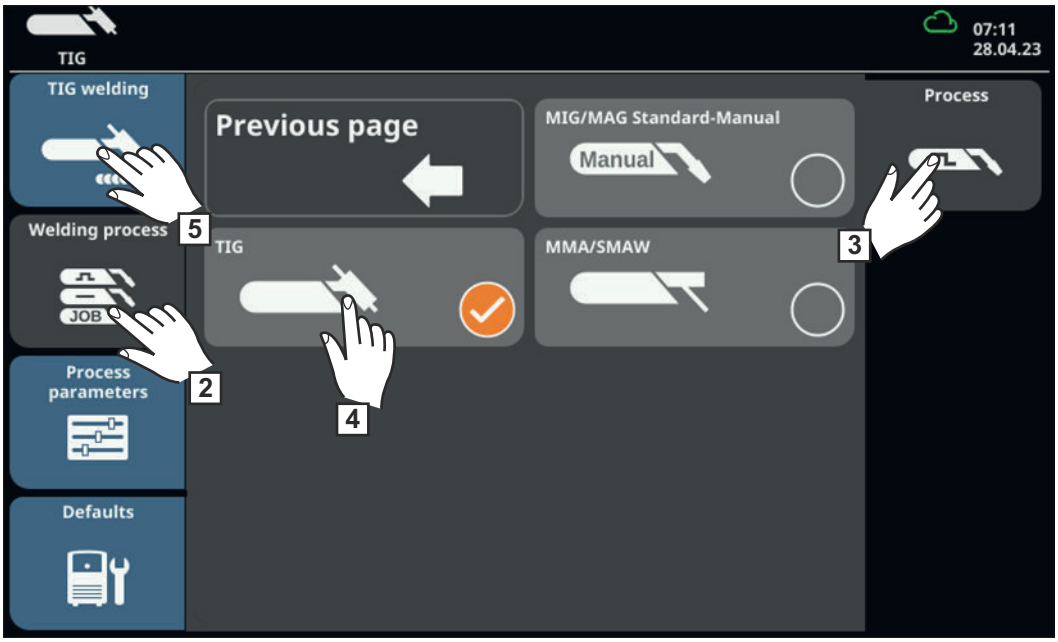

2 Select "Welding process"

3 Select "Process"

Alternatively, the welding process can also be selected via the status bar (compare with the selection described from page 102).

An overview of the welding processes is displayed.
Different welding processes are available depending on the model of welding machine or function packages installed.

4 Select TIG

The welding voltage is applied to the welding socket with a three second time lag.

NOTE!

Under certain circumstances, it may not be possible to change welding parameters that have been set on a control panel of a system component (such as remote control or wirefeeder) from the control panel of the welding machine.

5 Select "TIG welding"

The TIG welding parameters are displayed.

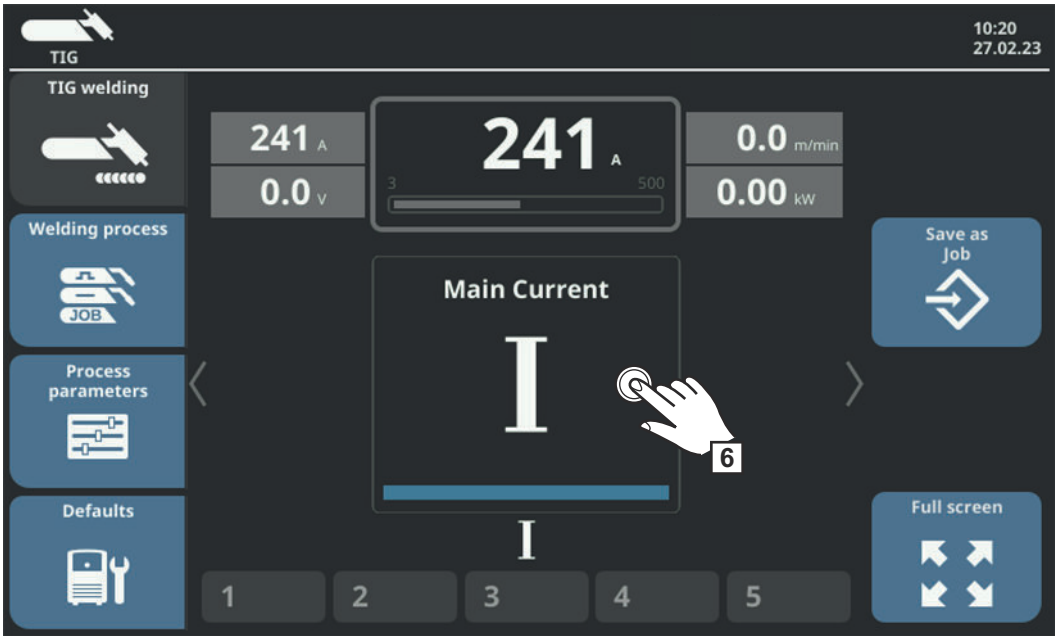

6 Press the adjusting dial to change the parameter

The value of the welding parameter is displayed as a horizontal scale:



The value of the selected parameter can now be changed.

7 Turn the adjusting dial and change the parameter

8 Adjust the process parameters accordingly to make user or application-specific settings on the welding system

9 Open the gas stop valve on the TIG gas-valve torch

10 Set the desired shielding gas flow rate on the pressure regulator

11 Start welding (ignite the arc)

Igniting the arc

The welding arc is ignited by touching the workpiece with the tungsten electrode.

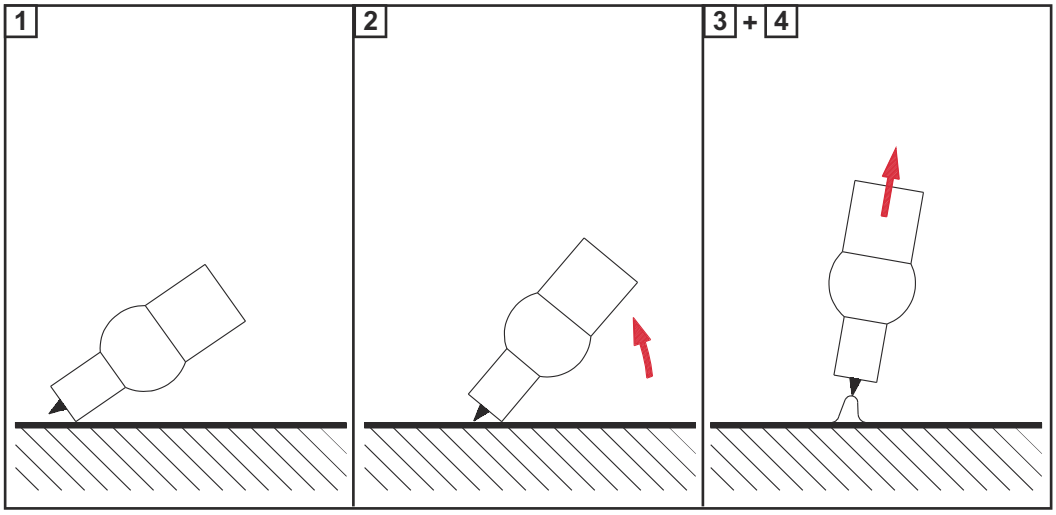

1 Place the gas nozzle on the ignition location so that there is 2-3 mm (0.08 - 0.12 in.) between the tip of the tungsten electrode and the workpiece. Keep a distance

2 Gradually tilt the welding torch up until the tungsten electrode touches the workpiece

3 Raise the welding torch and tilt it into the normal position - the arc now ignites

4 Carry out welding

Finishing welding

1 Lift the TIG gas-valve torch away from the workpiece until the arc goes out.

IMPORTANT! To protect the tungsten electrode, ensure that the shielding gas at the end of welding flows for long enough to allow the tungsten electrode to cool sufficiently.

2 Close the gas stop valve on the TIG gas-valve torch

MMA welding

Danger from incorrect operation and electric current

⚠ WARNING!

Danger due to incorrect operation and incorrectly performed work.
This can result in serious injury and damage to property.
- ▶ All the work and functions described in this document must only be carried out by technically trained and qualified personnel.
- ▶ Fully read and understand this document.
- ▶ Read and understand all safety rules and user documentation for this device and all system components.

⚠ WARNING!

Danger from electric current.
This can result in serious injury and damage to property.
- ▶ Before starting maintenance or servicing work, switch off all the devices and components involved and disconnect them from the mains.
- ▶ Secure all the devices and components involved to prevent unintentional restarting.
- ▶ After opening the device, use a suitable measuring instrument to check that electrically charged components (such as capacitors) have been discharged.

Preparations

1. Move the mains switch to the "O" position
2. Disconnect the mains plug
3. Remove the MIG/MAG welding torch

NOTE!

Check the rod electrode packaging or labelling to determine whether the rod electrodes are for positive pole or negative pole welding.

4. Plug the grounding (earthing) cable into either the (-) or the (+) current socket depending on the type of electrode, and twist to fasten it
5. Use the other end of the grounding (earthing) cable to establish a connection to the workpiece
6. Plug the bayonet current plug of the electrode holder cable into the free current socket with the opposite polarity, according to the type of electrode, and twist it clockwise to latch it in place
7. Plug in the mains plug

MMA welding

⚠ CAUTION!

Risk of injury and damage from electric shock.
As soon as the mains switch is in the "I" position, the rod electrode in the electrode holder is live.

▶ Make sure that the rod electrode does not touch any persons or electrically conductive or earthed parts (e.g. the housing, etc.)

1 Move the mains switch to the "I" position

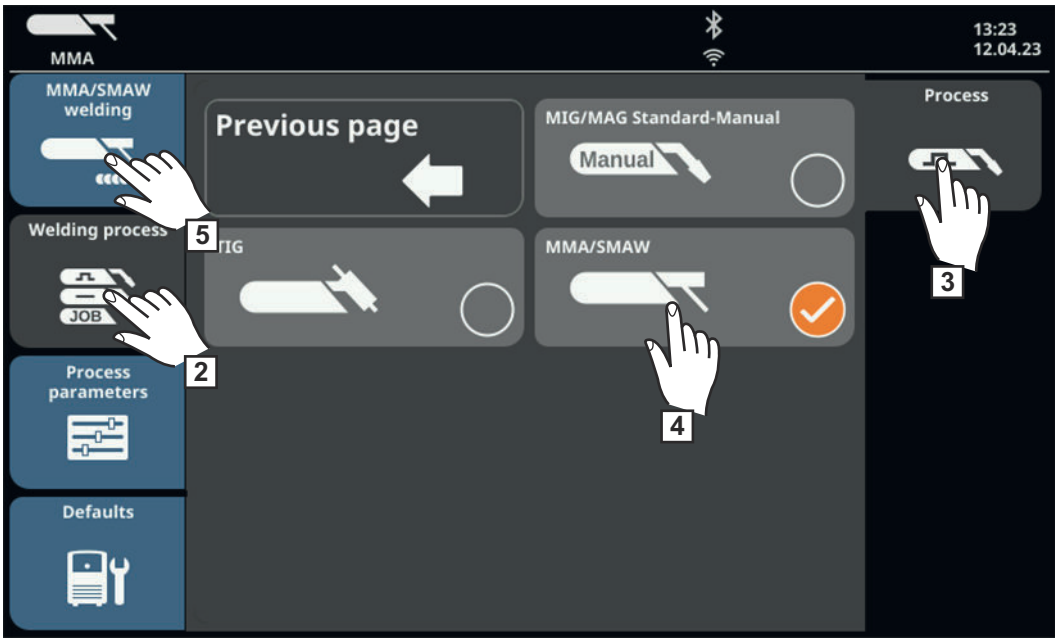

2 Select "Welding process"

3 Select "Process"

Alternatively, the welding process can also be selected via the status bar (compare with the selection described from page 102).

An overview of the welding processes is displayed.
Different welding processes are available depending on the model of welding machine or function packages installed.

4 Select the MMA/SMAW welding process

The welding voltage is applied to the welding socket with a three second time lag.

If the MMA/SMAW welding process is selected, any cooling unit present is automatically deactivated. It is not possible to switch it on.

NOTE!

Under certain circumstances, it may not be possible to change welding parameters that have been set on a control panel of a system component (such as remote control or wirefeeder) from the control panel of the welding machine.

5 Select "MMA/SMAW welding"

The MMA welding parameters are displayed.

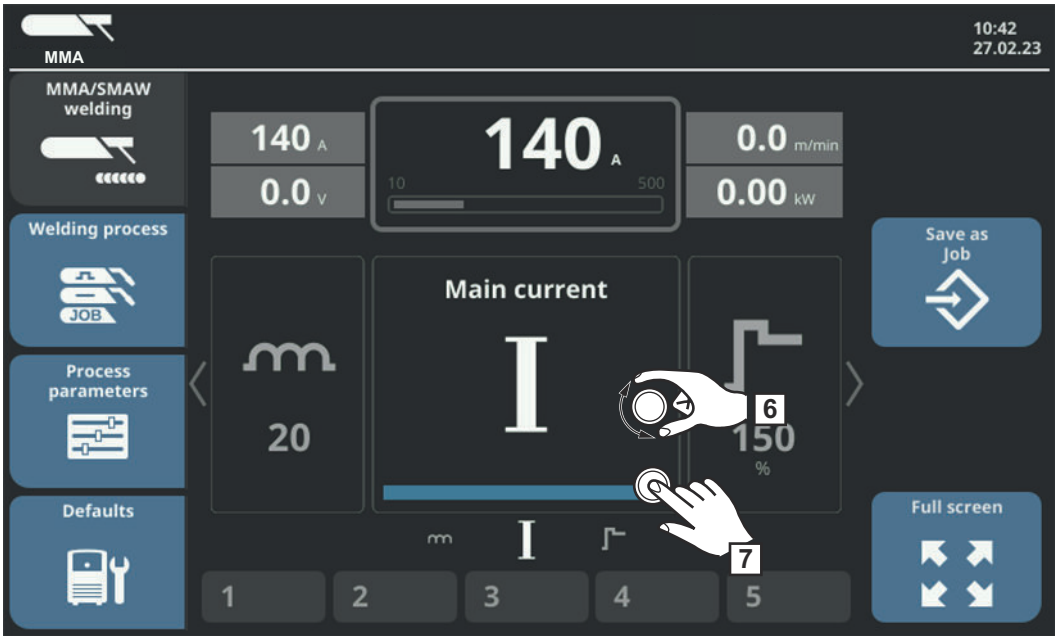

6 Turn the adjusting dial and select the desired welding parameter

7 Press the adjusting dial to change the parameter

The value of the welding parameter is displayed as a horizontal scale:

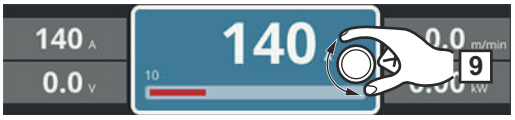

The value of the selected parameter can now be changed.

8 Turn the adjusting dial and change the parameter

9 Adjust the process parameters accordingly to make user or application-specific settings on the welding system

10 Start welding

Welding parameters for manual metal arc welding

The following welding parameters for MMA welding can be set and displayed under "Welding":

Arc-force dynamic
to influence the short-circuiting dynamic at the instant of droplet transfer

0-100
Factory setting: 20

0 ... soft and low-spatter arc
100 ... harder and more stable arc

Main current [A]

Setting range: depends on the welding machine being used

Before the start of welding, the device automatically displays a standard value based on the programmed parameters. The actual value is displayed during welding.

Starting current
for setting a starting current value in the range 0-200% of the set welding current in order to avoid slag inclusions or incomplete fusion.
The starting current depends on the electrode type.

0-200%
Factory setting: 150%

The starting current is active for the starting current time set under the process parameters.

Process parameters

Overview

Overview

Process parameters / Common ... see page 143

Process parameters / Components & Monitoring ... see page 166

Process parameters / JOB ... see page 174

Process parameters, General

Common process parameters

NOTE!

Depending on the device type, equipment or Welding Packages available, the display and sequence of process parameters may vary.

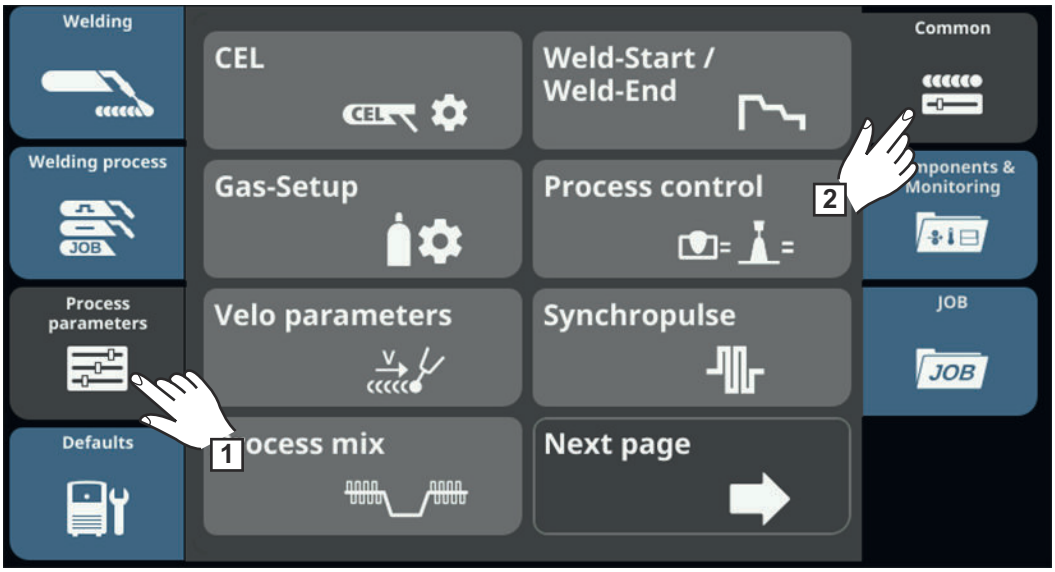

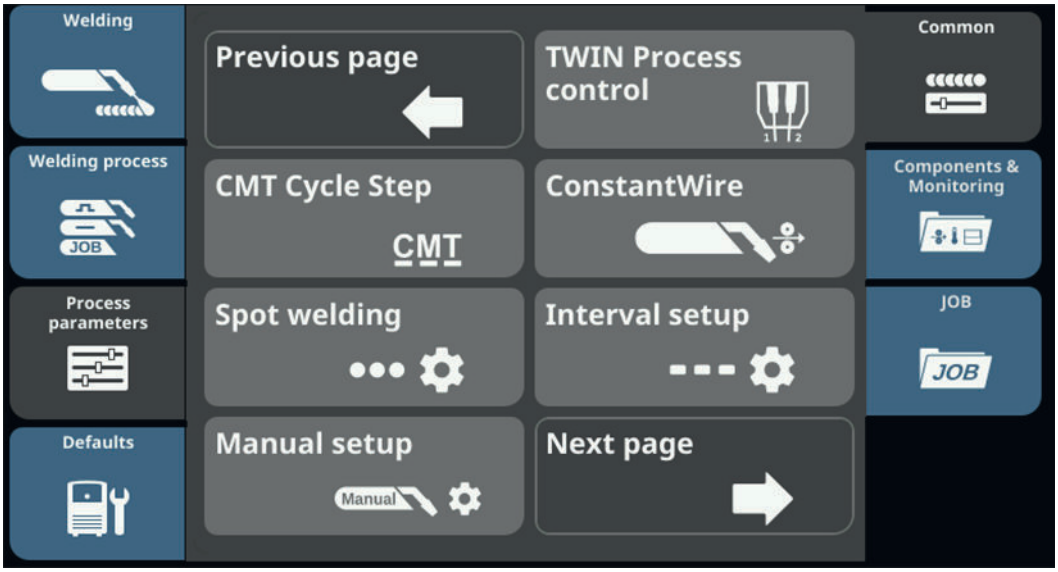

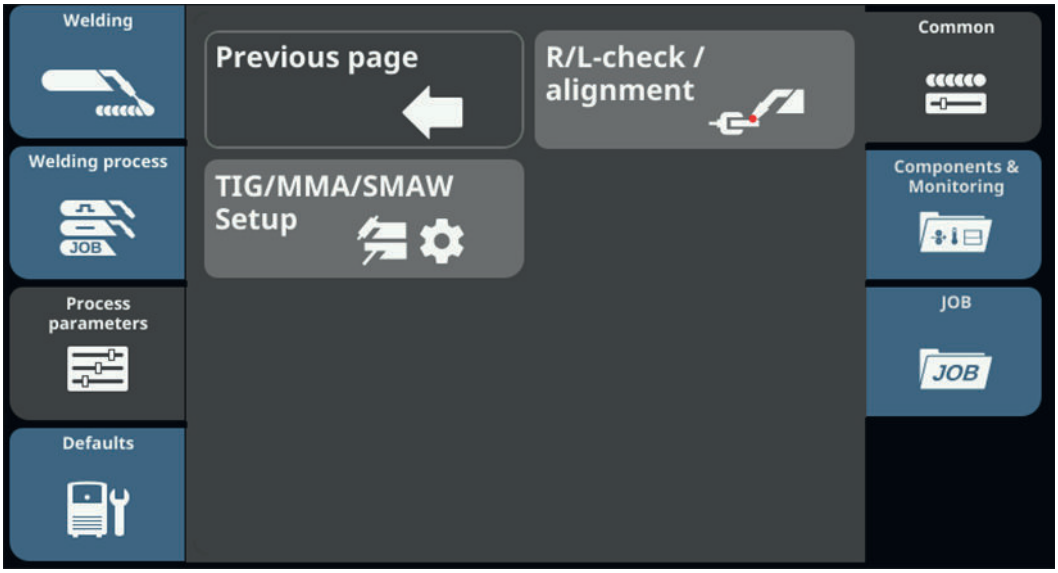

Common process parameters

NOTE!

Depending on the device type, equipment or Welding Packages available, the display and sequence of process parameters may vary.

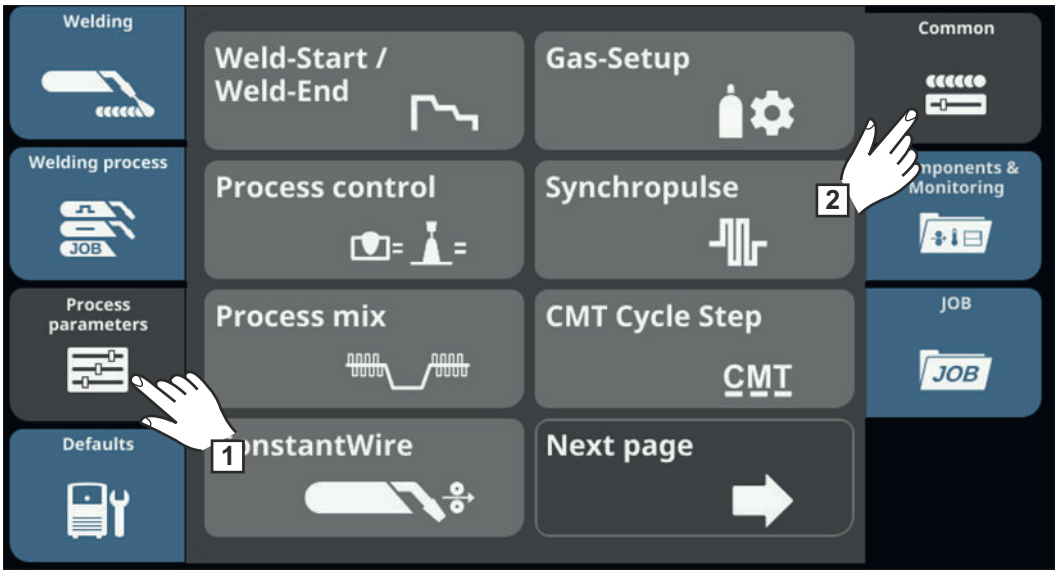



Process parameters for start of welding/end of welding

The following process parameters can be set and displayed for the start and end of welding:

Special 2/4 step parameters

Starting current
for setting the starting current for MIG/MAG welding (e.g. aluminium welding start-up)

0 - 400% (of welding current)
Factory setting: 135%

Start arc length correction
for correcting the arc length at the start of welding

-10 - -0.1 / auto / 0.0 - 10.0
Factory setting: auto

- ... shorter arc length
0 ... neutral arc length
+ ... longer arc length

auto:
the value set in the welding parameters is taken over

Starting current time
for setting the length of time the starting current is to be active

off / 0.1 - 10.0 s
Factory setting: off

Slope 1
for setting the time during which the starting current is decreased or increased to the welding current

0.0 - 9.9 s
Factory setting: 1.0 s

Slope 2
for setting the time during which the welding current is decreased or increased to the final current.

0.0 - 9.9 s
Factory setting: 1.0 s

Final current
for setting the final current so that
a) heat build-up towards the end of welding is prevented and
b) the end-crater can be filled when welding aluminium

0 - 400% (of welding current)
Factory setting: 50%

End arc length correction
for correcting the arc length at the end of welding

-10 - -0.1 / auto / 0.0 - 10.0
Factory setting: auto

- ... shorter arc length
0 ... neutral arc length
+ ... longer arc length

auto:
the value set in the welding parameters is taken over

Final current time
for setting the length of time for which the final current is to be active

off / 0.1 - 10.0 s
Factory setting: off

SFI parameters

SFI
to activate / deactivate the function SFI (Spatter Free Ignition - spatter-free ignition of the arc)

SFI causes an almost spatter-free ignition of the arc due to a controlled starting current curve with synchronised wire retraction movement.

off / on
Factory setting: off

NOTE!

- ▶ SFI is permanently integrated in certain welding processes and cannot be deactivated.
- ▶ If SH is displayed in the status line for SFI, the SlagHammer function is active in addition to SFI.
  SFI and SH cannot be deactivated.

SFI HotStart
for setting a HotStart time in conjunction with SFI ignition

During SFI ignition, a spray arc phase occurs within the set HotStart time. This increases the heat input irrespective of the mode, thus ensuring deeper penetration right from the very start of welding.

off / 0.01 - 2.00 s
Factory setting: off

Manual parameters

Ignition current (manual)
for setting the ignition current for MIG/MAG standard manual welding

100 - 550 A (TPS 320i, TPS 320i C)
100 - 600 A (TPS 400i)
100 - 650 A (TPS 500i, TPS 600i)
Factory setting: 500 A

Wire withdrawal (manual)
for setting the wire withdrawal value (= composite value based on backward movement of wire and a time) for MIG/MAG standard manual welding.
The wire withdrawal depends on the features of the welding torch.

0.0 - 10.0
Factory setting: 0.0

Wire withdrawal

Wire withdrawal
For setting the wire withdrawal value (= composite value based on backward movement of wire and a time).
The wire withdrawal depends on the features of the welding torch.

0.0 - 10.0
Factory setting: 0.0

Process parameters for Gas-Setup

The following process parameters can be set and displayed for Gas-Setup:

Gas pre flow
for setting the gas flow time before the arc is ignited

0-9.9 s
Factory setting: 0.1 s

Gas postflow
for setting the gas flow time after the arc has gone out

0-9.9 s
Factory setting: 0.5 s

Command value gas
Shielding gas flow rate
(only in conjunction with the OPT/i gas flow rate sensor option)

off / 0.5-30.0 l/min
Factory setting: 15.0 l/min

NOTE!

For the gas flow sensor to function correctly, the supply pressure at the welding machine must be at least 4.5 bar / 65 psi when the target flow rate is maintained.

▶ Uninstall existing flow controllers if necessary to achieve the minimum supply pressure of 4.5 bar / 65 psi.

Gas factor
dependent on the shielding gas used
(only in conjunction with the OPT/i gas flow rate sensor option)

auto / 0.90-20.00
Factory setting: auto
(the correction factor is automatically set for standard gases from the Fronius welding database)

In Job Mode, the set values of the parameters listed above can be stored individually for each job.

Process parameters for process control

The following process parameters can be set and displayed for the process control:
- Penetration stabiliser
- Arc length stabiliser
- Combination of penetration stabiliser and arc length stabiliser

Penetration stabilizer

The penetration stabilizer is used to set the max. permitted change in the wire speed to ensure that the welding current and hence the penetration are kept stable or constant with variable stickout.

The penetration stabilizer parameter is only available when the WP PMC (Welding Process Pulse Multi Control) or WP LSC (Welding Process Low Spatter Control) option has been enabled on the welding machine.

0.0-10.0 m/min (ipm)
Factory setting: 0 m/min

auto
A value of 10 m/min is stored for all characteristics, the penetration stabilizer is activated.

0
The penetration stabilizer is not activated.
The wire speed remains constant.

0.1-10.0
The penetration stabilizer is activated.
The welding current remains constant.

Application examples

Penetration stabilizer = 0 m/min (not activated)

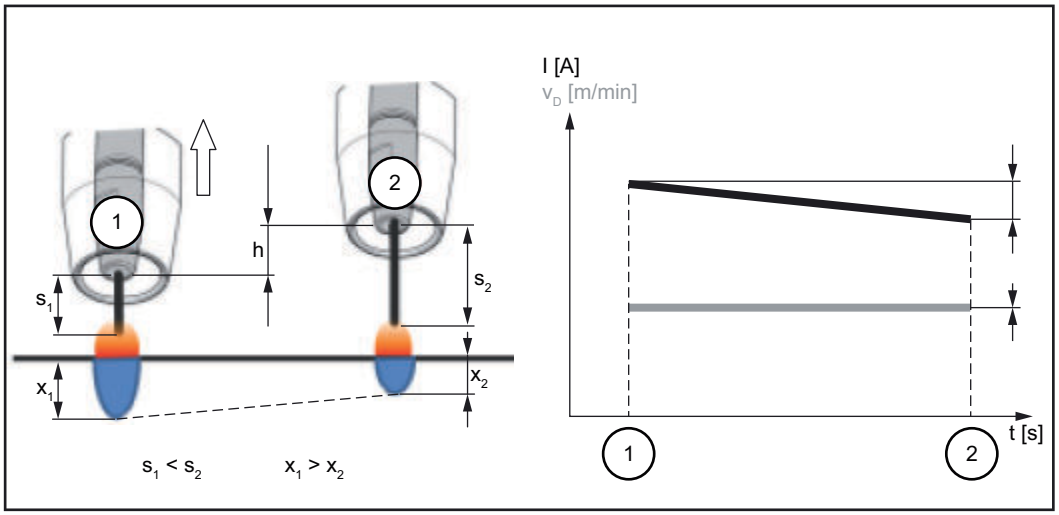

Penetration stabilizer = 0 m/min (not activated)

Changing the contact tube distance (h) alters the resistance in the welding circuit due to the longer stickout (s_2).
The constant voltage control for constant arc length causes a reduction in the mean current value and hence a smaller penetration (x_2).

Penetration stabilizer = n m/min (activated)

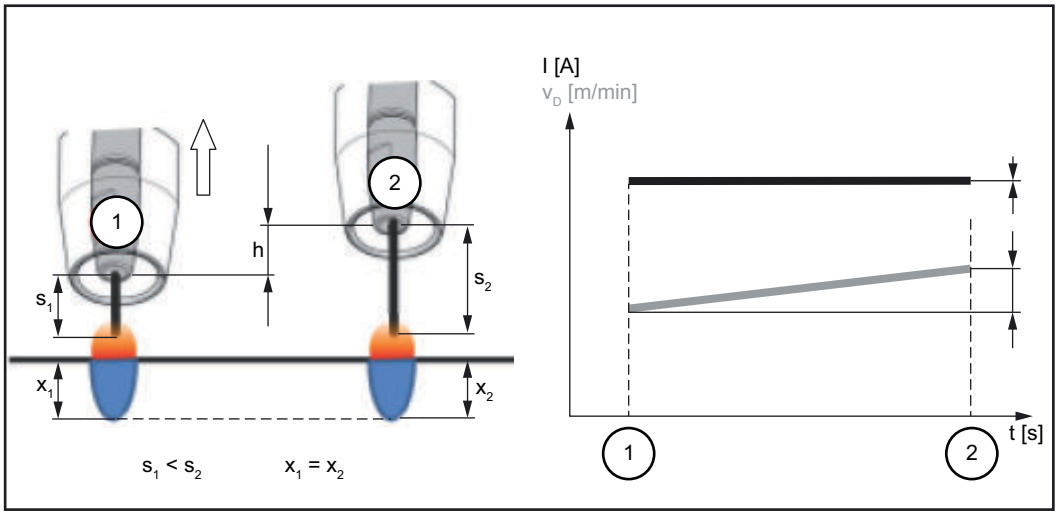

Penetration stabilizer = n m/min (activated)

Specifying a value for the penetration stabilizer ensures a constant arc length without large current variations if the stickout is changed (s_1 ==> s_2).
The penetration (x_1, x_2) remains virtually unchanged and stable.

Penetration stabilizer = 0.5 m/min (activated)

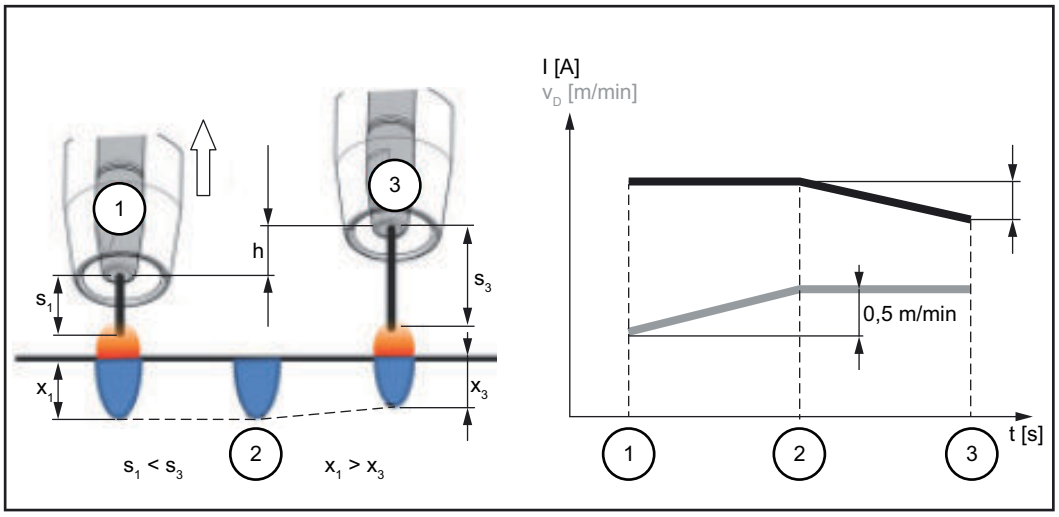

Penetration stabilizer = 0.5 m/min (activated)

To minimise the change in welding current if the stickout is changed (s_1 ==> s_3), the wire speed is increased or reduced by 0.5 m/min.
In the example shown, the stabilising effect is obtained without a change in current up to the set value of 0.5 m/min (Position 2).

I ... Welding current v_D ... Wire speed

Arc length stabilizer

Arc length stabilizer
The arc length stabilizer forces short arcs, advantageous for welding, via a short-circuit current control and keeps them stable even with a variable stickout or external interference.

The arc length stabilizer welding parameter is only available if the WP PMC (Welding Process Pulse Multi Control) option has been enabled on the welding machine.

0.0 / auto / 0.1-5.0 (effect of stabilizer)
Factory setting: 0.0

0.0
The arc length stabilizer is deactivated.

auto
- For inert gases (100% Ar, He, etc.) a value = 0 is stored.
- For the remaining materials / gas combinations, a characteristic-dependent value between 0.2-0.5 is stored.
- From a wire speed of 16 m/min a value = 0 is stored

0.1-5.0
The arc length stabilizer is activated.
The arc length is decreased until short circuits start to occur.

NOTE!

If the arc length stabilizer is activated, the normal arc length correction is only effective at the start of welding.

▶ The arc length correction is then no longer displayed in the welding parameters.

Application examples

Arc length stabilizer = 0 / 0.5 / 2.0

①Arc length stabilizer = 0

②Arc length stabilizer = 0.5

③Arc length stabilizer = 2

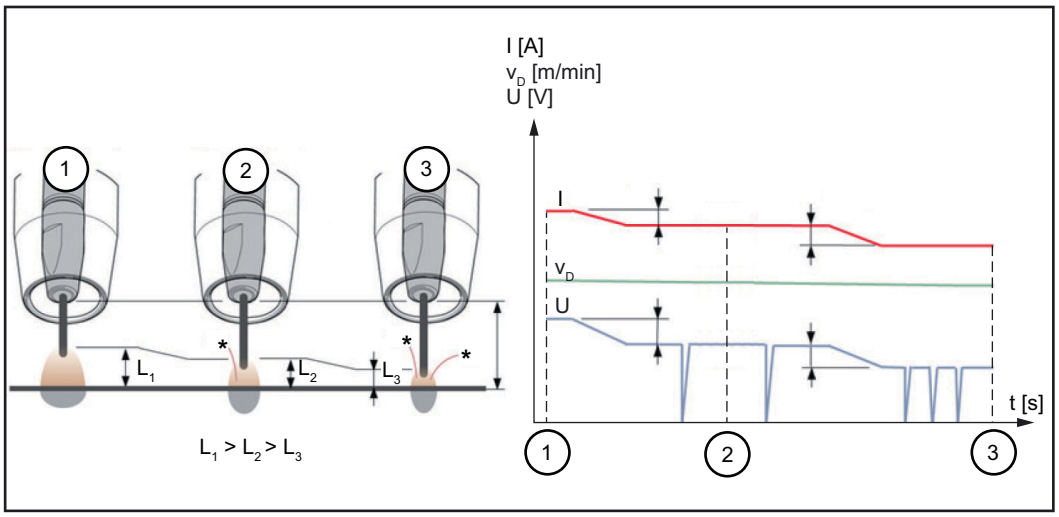

Arc length stabilizer = 0 / 0.5 / 2.0

Activating the arc length stabilizer reduces the arc length until short circuits start to occur. The advantages of a short, stable and controlled arc can be used more effectively as a result.

Increasing the arc length stabilizer causes a further shortening of the arc length (L1 ==> L2 ==> L3). The advantages of a short, stable and controlled arc can be used more effectively.

Arc length stabilizer with change of weld seam profile and position

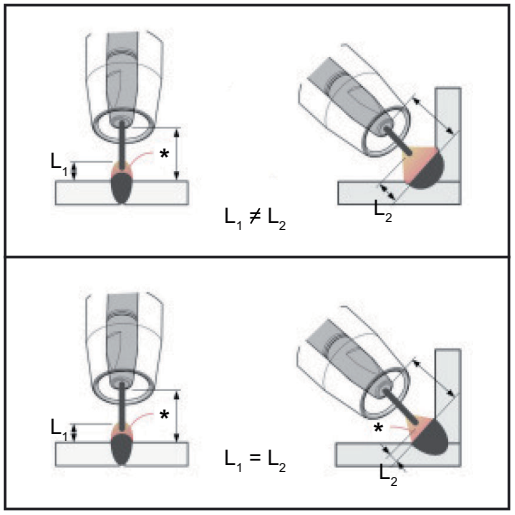

Arc length stabilizer not activated

A change of weld seam profile or welding position can negatively affect the welding result

Arc length stabilizer activated

Since the number and duration of the short circuits is controlled, the properties of the arc stay the same if the weld seam profile or welding position is changed.

I ... Welding current v_D ... Wire speed U ... Welding voltage
* ... Number of short circuits

Combination of penetration stabilizer and arc length stabilizer

Example: Stick out change

Arc length stabilizer without penetration stabilizer

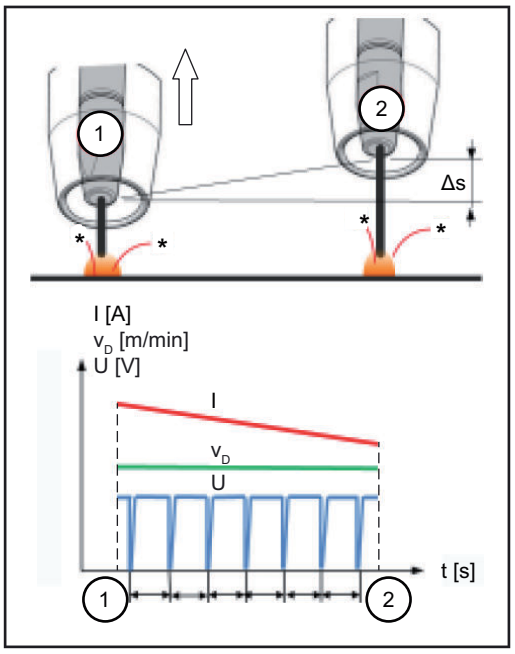

The advantages of a short arc are maintained even if the stick out is changed, since the short-circuit properties stay the same.

Arc length stabiliser with penetration stabilizer

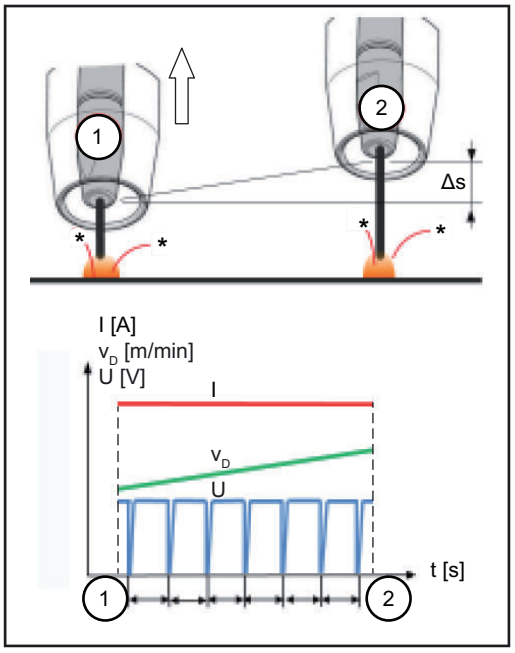

If the stick out is changed with the penetration stabilizer activated, the penetration also stays the same. The short circuit behaviour is controlled by the arc length stabilizer.

I ... Welding current v_D ... Wire speed U ... Welding voltage
* ... Number of short circuits Δs ... Stick out change

Process parameters for VELO

The following process parameters can be set for welding in conjunction with a Velo system:

Velo
To activate/deactivate the Velo system

off / on
Factory setting: off

Welding speed "Velo"
For setting the welding speed for the Velo system

10–300 cm/min
Factory setting: 35 cm/min

Wire retract "Velo"
For setting how far the Velo welding wire is retracted from the weld after the end of welding

off / auto / 0.0–25.0 mm
Factory setting: auto

Process parameters for SynchroPulse

The following process parameters can be set for SynchroPulse welding:

(1) SynchroPulse
to activate/deactivate SynchroPulse

off / on
Factory setting: on

(2) Wire speed
for setting the average wire speed and therefore the welding power for SynchroPulse

e.g. 2–25 m/min (ipm)
(depending on wire speed and welding characteristic)
Factory setting: 5.0 m/min

(3) Delta wire feed
for setting the Delta wire feed:
with SynchroPulse, the set wire speed is alternately increased/decreased by the Delta wire feed. The parameters concerned adapt themselves to this wire speed acceleration/delay accordingly.

0.1–6.0 m/min / 5–235 ipm
Factory setting: 2.0 m/min

NOTE!

The maximum adjustable Delta wire feed of 6 m/min (235 ipm) is only possible up to a frequency of approx. 3 Hz.
In the frequency range of 3–10 Hz, the adjustable Delta wire feed decreases.

(4) Frequency
for setting the frequency for SynchroPulse

0.5–10.0 Hz
Factory setting: 3.0 Hz

NOTE!

In TWIN mode, the setting of the frequency on the lead welding machine also affects the trail welding machine.
The setting of the frequency on the trail welding machine has no effect.

(5) Duty Cycle (high)
for weighting the duration of the higher operating point in a SynchroPulse period

10–90%
Factory setting: 50 Hz

NOTE!

In TWIN mode, the setting of the duty cycle (high) on the lead welding machine also affects the trail welding machine.
The setting of the duty cycle (high) on the trail welding machine has no effect.

(6) Arc correction high
for correcting the arc length for SynchroPulse in the upper operating point (= average wire speed plus Delta wire feed)

-10.0-+10.0
Factory setting: 0.0

- .... short arc
0 ... uncorrected arc length
+ ... longer arc

NOTE!

If SynchroPulse is activated, the normal arc length correction has no effect on the welding process.
▶ The arc length correction is then no longer displayed in the welding parameters.

(7) Arc correction low
for correcting the arc length for SynchroPulse in the lower operating point (= average wire speed less Delta wire speed)

-10.0-+10.0
Factory setting: 0.0

- ... short arc
0 ... uncorrected arc length
+ ... longer arc

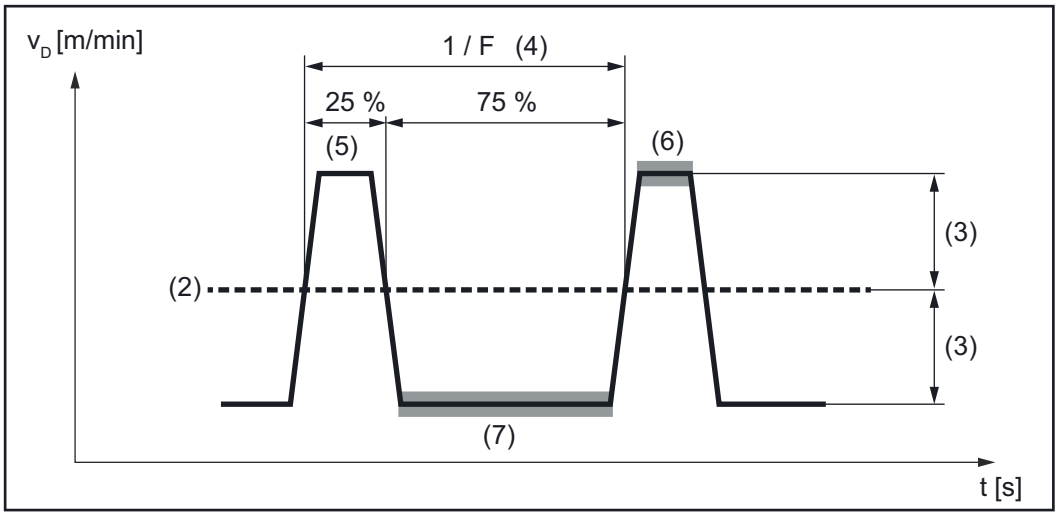

SynchroPulse example, duty cycle (high) = 25%

Process parameters for process mix

The following process parameters for mixed processes can be set under "Process mix":

Wire speed v_D *
Wire speed

1.0–25.0 m/min / 40–985 ipm

The wire speed value is applied or can be specified and changed in the Process mix parameters.

Arc length correction

-10.0-+10.0

The arc length correction value is applied or can be specified and changed in the process mix parameters.

Pulse correction
for changing the pulse energy in the pulsed arc process phase

-10.0-+10.0

The pulse correction value is applied or can be specified and changed in the process mix parameters.

Upper power time correction (3) *
to set the duration of the hot process phase in a mixed process

-10.0-+10.0
Factory setting: 0

Upper and lower power time correction is used to define the relationship between hot and cold process phases.

If the upper power time correction is increased, the process frequency reduces and the PMC process phase becomes longer.

If the upper power time correction is reduced, the process frequency increases and the PMC process phase becomes shorter.

Lower power time correction (2) *
to set the duration of the cold process phase in a mixed process

-10.0-+10.0 / 1-100 CMT cycles (for CMT mix characteristics)
Factory setting: 0

Upper and lower power time correction is used to define the relationship between hot and cold process phases.

If the lower power time correction is increased, the process frequency reduces and there is a longer LSC process phase or a longer CMT process phase for CMT mix.

If the lower power time correction is reduced, the process frequency increases and there is a shorter LSC process phase or a shorter CMT process phase for CMT mix.

Lower power correction (1) *
to set the energy input in the cold process phase in a mixed process

-10.0-+10.0
Factory setting: 0

If the lower power correction is increased, this results in a higher wire speed and therefore higher energy input in the cold LSC process phase or in the cold CMT process phase.

---

* Representation of the parameters in the following graphics

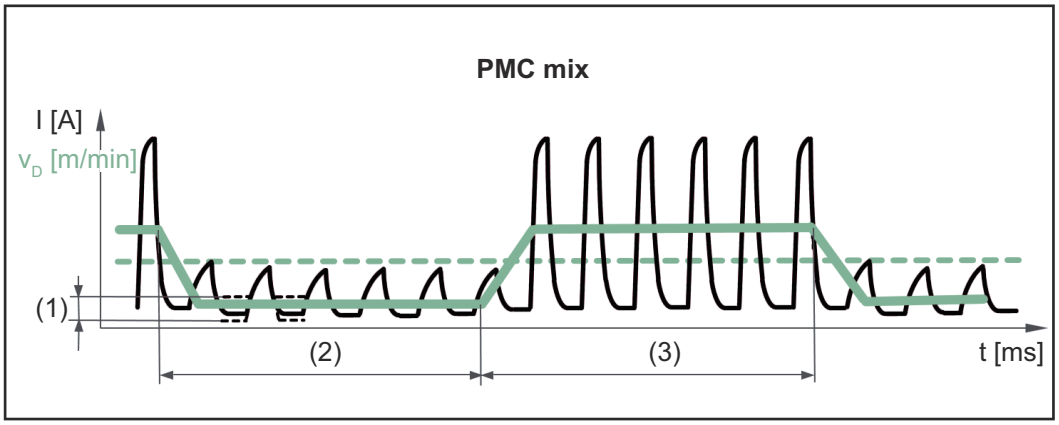

Mixed process between PMC and LSC welding process. A cold LSC process phase follows a hot PMC process phase as part of a cycle.

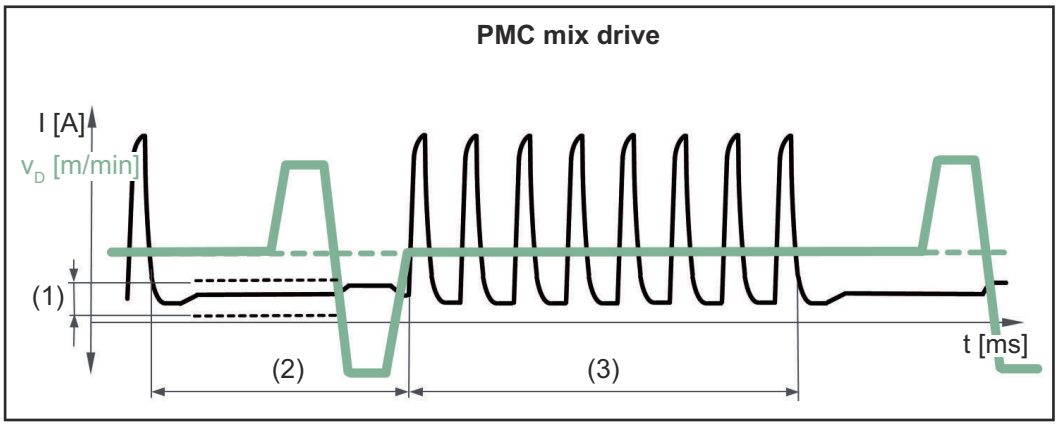

Mixed process between PMC and wire movement reversal using a PushPull drive unit. A cold low power phase with calibration movement follows a hot PMC process phase.

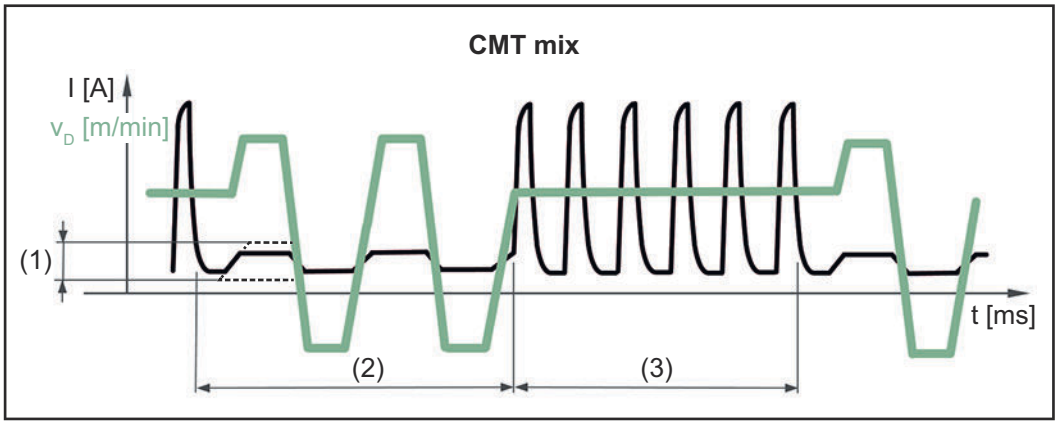

Mixed process between CMT and PMC welding process. Cold CMT process phases follow hot PMC process phases.

(1) Lower power correction
(2) Low power time corr.
(3) High power time corr.
v_D Wire speed

Process parameters for process control additive welding

Wire speed
Wire speed

1.0–30.0 m/min / 40–1181 ipm

The wire speed value is applied or can be specified and changed in the parameters for additive welding.

Arc length correction

-10.0-+10.0

The wire speed value is applied or can be specified and changed in the parameters for additive welding.

Power correction
for setting the welding power at a constant wire speed to ensure a consistent seam structure

-10.0-+10.0
Factory setting: 0

Deposition rate stabilizer

on / 0.1–10.0 m/min / off
Factory setting: on

Deposition rate stabilizer dynamic

auto / 10.0–0.0
Factory setting: auto

Process parameters for CMT Cycle Step

CMT Cycle Step
for activating/deactivating the CMT Cycle Step function

On / Off

Wire speed
Wire speed, determines the deposition rate during the welding process phase and therefore the size of the welding spot;

Setting range: in m/min (ipm), dependent on the welding characteristic

The wire speed value is applied or can also be specified or changed in the CMT Cycle Step parameters.

Cycles (welding spot size)
for setting the number of CMT cycles (weld droplets) for a welding spot;
the number of CMT cycles and the set wire speed determine the size of the welding spot.

1–2000

Pause time interval
for setting the time between each welding spot

0.01–2.00 s

The higher the value for the pause time interval, the cooler the welding process is (heavier flaking).

Cycles interval
for setting the number of repeated CMT cycles including pauses until the end of welding

constant / 1–2000

constant
The repetitions are carried out continuously;
end of welding, for example using "Arc Off"

Process parameters for spot welding

Spot welding time

0.1 - 10.0 s
Factory setting: 1.0 s

Process parameters for interval

Interval
to activate / deactivate stitch welding

off / on
Factory setting: off

Wire speed

0.0 - max. m/min (depending on the wirefeeder used)

Stitch welding time

0.01 - 9.9 s
Factory setting: 0.3 s

Interval break time

off / 0.01 - 9.9 s
Factory setting: 0.3 s

Interval cycles

constant / 1 - 99
Factory setting: constant

Process parameters for manual setup

Ignition current
for setting the ignition current for MIG/MAG standard manual welding

100 - 550 A (TPS 320i, TPS 320i C)
100 - 600 A (TPS 400i)
100 - 650 A (TPS 500i, TPS 600i)
Factory setting: 500 A

Wire withdrawal
for setting the wire withdrawal value (= composite value based on backward movement of wire and a time) for MIG/MAG standard manual welding.
The wire withdrawal depends on the features of the welding torch.

0.0 - 10.0
Factory setting: 0.0

Characteristic slope

auto / U constant / 1000 - 8 A/V
Factory setting: auto

R/L-check / alignment

Align the welding circuit resistance (R) and welding circuit inductivity (L) if one of the following components of the welding system is changed:
- Torch hosepacks
- Interconnecting hosepacks
- Grounding cables, welding power-leads
- Wirefeeders
- Welding torches, electrode holders
- PushPull units

Prerequisites for R/L alignment:

The welding system must be complete: closed welding circuit with welding torch and torch hosepack, wirefeeders, grounding cable, interconnecting hosepacks.

Performing R/L alignment:

1 Select Process parameters / General / R/L-check / alignment

The current welding circuit inductivity and welding circuit resistance values are displayed.

2 Select "Next" / press the adjusting dial / press the torch trigger

The second step of the R/L alignment wizard appears.

3 Follow the displayed instructions

IMPORTANT! Contact between the earthing clamp and workpiece must be established on a cleaned area of the workpiece.

4 Select "Next" / press the adjusting dial / press the torch trigger

The third step of the R/L alignment wizard appears.

5 Follow the displayed instructions

6 Select "Next" / press the adjusting dial / press the torch trigger

The fourth step of the R/L alignment wizard appears.

7 Follow the displayed instructions

8 Press the torch trigger / select "Next" / press the adjusting dial

After a successful measurement, the current values are displayed.

9 Select "Finish" / press the adjusting dial

Alternatively, R/L alignment can also be carried out via a Jobmaster welding torch.

Process parameters for TIG / electrode setup

The following process parameters can be set and displayed for the TIG and MMA welding processes:

Process parameters for MMA welding:

Starting current time
for setting the length of time the starting current is to be active

0.0-2.0 s
Factory setting: 0.5 s

Characteristic
for selecting the electrode characteristic

I-constant / 0.1-20.0 A/V / P-constant / Arc air gouging
Factory setting: I-constant

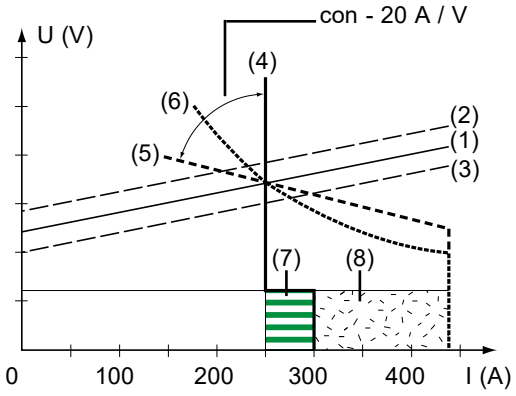

(1) Load line for rod electrode
(2) Load line for rod electrode where arc length is increased
(3) Load line for rod electrode where arc length is reduced
(4) Characteristic where "I-constant" parameter is selected (constant welding current)
(5) Characteristic where "0.1-20" parameter is selected (drooping characteristic with adjustable slope)
(6) Characteristic where "P-constant" parameter is selected (constant welding power)

(7) Example of pre-set arc-force dynamic where characteristic (4) is selected
(8) Example of pre-set arc-force dynamic where characteristic (5) or (6) is selected

I-constant (constant welding current)
- If the "I-constant" parameter is set, the welding current will be kept constant, irrespective of the welding voltage. This results in a vertical characteristic (4).
- The "I-constant" parameter is particularly suitable for rutile electrodes and basic electrodes.

0.1-20.0 A/V (drooping characteristic with adjustable slope)
- Parameter "0.1-20" is used to set a drooping characteristic (5). The setting range extends from 0.1 A / V (very steep) to 20 A / V (very flat).
- Setting a flat characteristic (5) is only advisable for cellulose electrodes.

P-constant (constant welding power)
- If the "P-constant" parameter is set, the welding power is kept constant, irrespective of the welding voltage and welding current. This results in a hyperbolic characteristic (6).
- The "P-constant" parameter is particularly suitable for cellulose electrodes.

Arc air gouging
- Special characteristic for arc air gouging with a carbon electrode

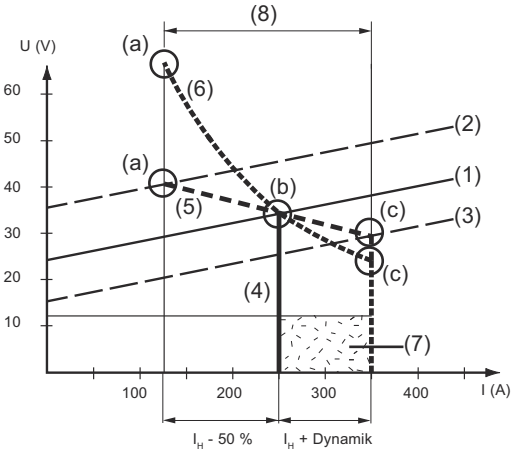

(1) Load line for rod electrode
(2) Load line for rod electrode where arc length is increased
(3) Load line for rod electrode where arc length is reduced
(4) Characteristic where "I-constant" parameter is selected (constant welding current)
(5) Characteristic where "0.1-20" parameter is selected (drooping characteristic with adjustable slope)
(6) Characteristic where "P-constant" parameter is selected (constant welding power)

(7) Example of pre-set arc-force dynamic where characteristic (5) or (6) is selected

(8) Possible change in the current where characteristic (5) or (6) is selected, as a function of the welding voltage (arc length)

(a) Operating point where arc length is long

(b) Operating point where welding current I_H is set

(c) Operating point where arc length is short

The characteristics (4), (5) and (6) shown here apply when using a rod electrode whose characteristic corresponds - at a given arc length - to the load line (1).

Depending on what welding current (I) has been set, the point of intersection (operating point) of characteristics (4), (5) and (6) will be displaced along the load line (1). The operating point provides information on the actual welding voltage and the actual welding current.

Where the welding current (I_H) is permanently set, the operating point may migrate along the characteristics (4), (5) and (6) according to the welding voltage at a given moment. The welding voltage U is dependent upon the arc length.

If the arc length changes (e.g. in accordance with the load line (2)) the resulting operating point will be the point where the corresponding characteristic (4), (5) or (6) intersects with the load line (2).

Applies to characteristics (5) and (6): Depending upon the welding voltage (arc length), the welding current (I) will also become either smaller or larger, even though the value set for I_H remains the same.

Anti-stick
to activate/deactivate the anti-stick function

off / on
Factory setting: on

As the arc becomes shorter, the welding voltage may drop so far that the rod electrode will tend to stick. This may also cause the rod electrode to burn out.

The anti-stick function prevents the electrode from burning out. If the rod electrode begins to stick, the welding machine switches the welding current off after 1.5 seconds. After the rod electrode has been lifted off the workpiece, the welding process can be continued without any problems.

Break voltage
for setting a voltage, at which the welding process can be ended by slightly lifting the rod electrode.

20-90 V
Factory setting: 90 V

The arc length depends on the welding voltage. To end the welding process, it is usually necessary to significantly lift the rod electrode away from the workpiece. With the break voltage parameter, the welding voltage can be limited to a value that makes it possible to end the welding process simply by lifting the rod electrode slightly.

IMPORTANT! If, during welding, you often find that the welding process is ended unintentionally, increase the value of the break voltage.

Process parameters for TIG welding:

Break voltage
for setting a voltage, at which the welding process can be ended by slightly lifting the TIG welding torch.

10.0-30.0 V
Factory setting: 14 V

Comfort Stop Sensitivity
to activate/deactivate the TIG Comfort Stop function

off / 0.1 - 1.0 V
Factory setting: 0.8 V

At the end of the welding process, the welding current is switched off automatically if the arc length increases by more than a defined amount. This prevents the arc being unnecessarily elongated when the TIG gas-valve torch is lifted off the workpiece.

Sequence:

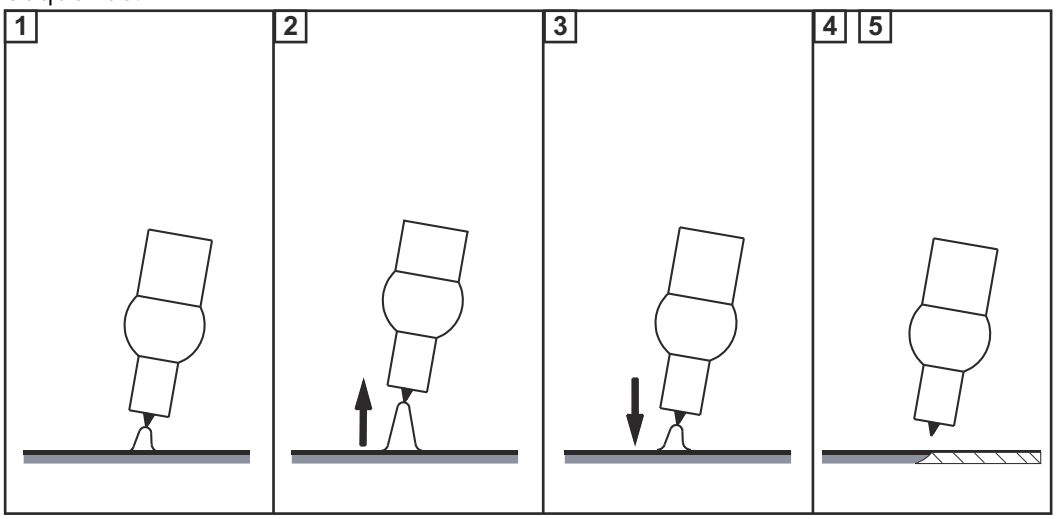

1 Welding

2 At the end of the welding action, briefly raise the welding torch

The arc length is increased significantly.

3 Lower the welding torch
- The arc length is reduced significantly
- The TIG Comfort Stop function is triggered

4 Keep the welding torch at the same height
- The welding current is continuously decreased (downslope).
- The arc goes out.

IMPORTANT! The downslope is pre-set and cannot be adjusted.

5 Raise the welding torch from the workpiece

Components and monitoring process parameters

Process parameters - Components and monitoring

NOTE!

Depending on the device type, equipment or WeldingPackages available, the display and sequence of process parameters may vary.

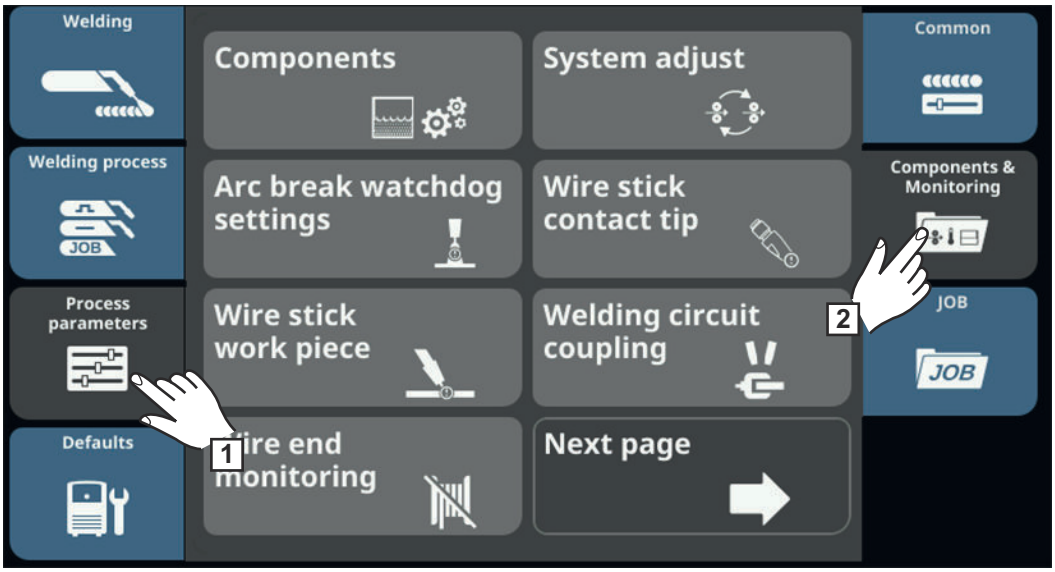

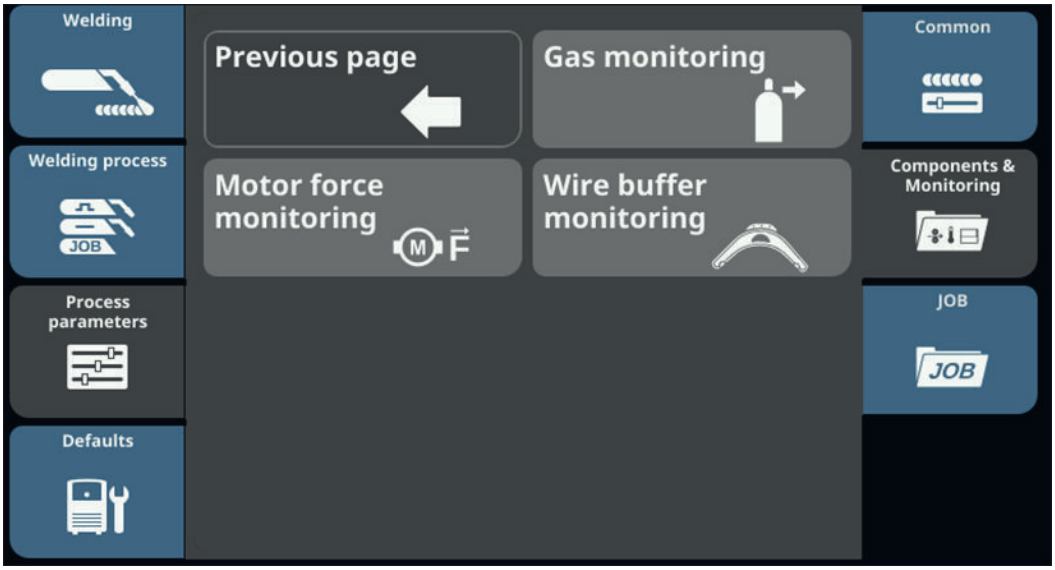

Process parameters for components

The following process parameters can be set and displayed for the system components of a welding system:

Cooling unit

Cooling unit mode
to determine whether a cooling unit is to be switched on or off, or operated automatically

eco / auto / on / off (depending on the cooling unit)
Factory setting: auto

Delay time flow sensor
for setting the time from when the flow sensor responds until a warning message is output

5 - 25 s
Factory setting: 5 s

Coolant flow warning level
(only if the flow temperature sensor option is present on the cooling unit)
If the parameter is activated, a warning is generated if the value entered is not reached.

off / 0.75 - 0.95 l/min
Factory setting: off

Wirefeeder

Inching value
for setting the wire speed at which the wire electrode is threaded into the torch hosepack

e.g. 2 - 25 m/min / 20 - 3935 ipm
(depending on the wire speed)
Factory setting: 10 m/min

NOTE!

The feeder inching speed can also be set in the window that opens when the wire threading button is pressed:

- ▶ Press feeder inching button
- ▶ Press and turn the adjusting dial to change the value of the feeder inching speed
- ▶ Select "Close" or press the adjusting dial to accept the value

Power source

Ignition timeout
Length of wire that is fed before the safety cut-out trips

off / 5 - 100 mm (0.2 - 3.94 in.)
Factory setting: off

NOTE!

The ignition time-out process parameter is a safety function.
The length of wire that is fed before the safety cut-out trips may differ from the pre-set wire length, particularly when the wire is being fed at fast wire speeds.

How it works:
Once the torch trigger is pressed, gas pre-flow begins immediately. Wirefeeding then begins, followed by ignition. If no current starts flowing before the specified length of wire has been fed, the power source cuts out automatically.
To try again, press the torch trigger again.

Sense lead
to enable/disable the sense lead function

off / on
Factory setting: on

The sense lead is additional hardware for direct voltage measurement on the workpiece. The function is used to determine the correct actual value when several welding processes are welding on one component at the same time and there is a risk of coupled interference voltages due to unfavourable hosepack routing or common earth leads.

System adjust

If two motors are used in a welding system, they need to be calibrated to maintain process stability.

System calibration must be carried out on welding systems with PushPull units or unreeling wirefeeders following successful installation or replacement of a wirefeeder.

A notification will be displayed.

1 Select "OK" and start system calibration

The system calibration wizard starts.

2 Follow the instructions shown

System calibration can also be started manually here.

Perform system calibration:

1 Select Process parameters / Components & monitoring / System adjust

If system calibration is required, the system calibration wizard starts. The first step in the system calibration wizard is displayed:

2 Follow the displayed instructions
3 To move to the next step in the wizard, select "Next" / press the adjusting dial

When system calibration has been completed successfully, a confirmation to this effect is displayed.

4 To close the system calibration wizard, select "Finish" / press the adjusting dial

Arc break monitoring

1 Select Process parameters / Components & Monitoring / Arc break watchdog settings

The "Arc break watchdog settings" overview is displayed.

2 Turn the adjusting dial and select the desired parameter
3 Press the adjusting dial (blue background)

4 Turn the adjusting dial and change the value of the parameter (blue background)

Arc break reaction = ignorieren (deactivated):
The welding machine remains active and no error message appears on the display.

Arc break reaction = Fehler (activated):
If the arc break fractures off and no current flow is detected within a set arc break period, the system shuts down automatically and an error message appears on the display.

Factory setting = ignorieren

Arc break time = 0-2.00 s
An error is output if the set period is exceeded.

Factory setting = 0.2 s

5 Select "OK" to activate arc break monitoring (arc break watchdog)

Wire stick contact tip

1 Select Process parameters / Components & Monitoring / Wire stick contact tip

The overview "Wire stick contact tip - setup menu" is displayed.

2 Turn the adjusting dial and select the desired parameter

3 Press the adjusting dial (blue background)

4 Turn the adjusting dial and change the value of the parameter (blue background)

Wire stick on contact tip = ignore:
The wire stick check on the contact tip is deactivated.

Wire stick on contact tip = Fehler (activated):
The welding process will be interrupted in the event of wire stick on the contact tip.

IMPORTANT! Monitoring is only possible during dip transfer arc processes.

Factory setting = ignorieren

Filter time = 0.5 - 5.0 s
Maximum duration without arc short circuit until welding is interrupted.

Factory setting = 0.5 s

5 Select "OK" to conclude the settings

Wire stick work piece

1 Select Process parameters / Components & Monitoring / Wire stick work piece

The overview "Wire stick work piece - setup menu" is displayed.

2 Turn the adjusting dial and select the desired parameter

3 Press the adjusting dial (blue background)

4 Turn the adjusting dial and change the value of the parameter (blue background)

Wire stick on workpiece = ignorieren:
Wire stick monitoring on the workpiece is deactivated.

Wire stick on workpiece = Fehler (activated):
The welding process will be interrupted if the wire sticks on the workpiece.

Factory setting = ignorieren

5 Select "OK" to conclude the settings

Welding circuit coupling

This function can be used to measure the inductances present in the welding circuit.
Inductances can lead to welding problems, for example when several systems weld on one component.

With the help of inductance measurement and appropriate cable management, welding problems can be prevented early on during the commissioning of a welding system.

Selecting the "Welding circuit coupling" button starts a corresponding wizard.

1 To measure the inductances in the welding circuit, follow the instructions issued by the wizard.

Measuring results:

Result	$R_{coupling}$ (common ground)	$K_{coupling}$ (inductive coupling)
Very good	0 mOhm	0%
Good	1 - 2.5 mOhm	2 - 15%
Average	3 - 15 mOhm	16 - 30%
Poor	16 - 100 mOhm	31 - 100%

The measurement results are stored in the logbook.

Details on the welding circuit coupling are described in the operating instructions "Cable Management Guide" - 42,0426,0420,xx.
The operating instructions are available as HTML under the following link:

https://manuals.fronius.com/html/4204260420

Wire end monitoring

1 Select Process parameters / Components & Monitoring / Wire end monitoring

The overview "Wire end monitoring setup menu" is displayed.

2 Turn the adjusting dial and select the desired parameter, depending on the type of wire end monitoring:

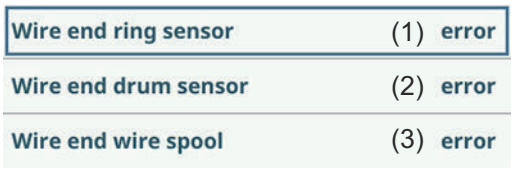

(1) Wire end reaction for OPT/i WF R WE ring sensor 4,100,878,CK
(2) Wire end reaction for OPT/i WF R WE drum 4,100,879,CK
(3) Wire end reaction for OPT/i WF R WE wire end 4,100,869,CK

3 Press the adjusting dial (blue background)

4 Turn the adjusting dial and change the value of the parameter (blue background)

Reaction = error:
Wire end fault, welding will be interrupted immediately. The fault will be shown on the display.

Reaction = after seam end:
The wire end fault will show on the display after the current welding process has ended.

Reaction= ignore (deactivated):
No reaction at the wire end

Factory setting = error

5 Select "OK" to conclude the settings

Gas monitoring

The gas monitoring parameters are only available when the optional OPT/i gas flow rate sensor is present.

A lower limit for the gas flow rate can be set using gas monitoring. If the gas flow rate drops below this limit for a defined period of time, an error message is immediately issued and the welding operation is halted.

1 Select Process parameters / Components & Monitoring / Gas monitoring

The "Gas monitoring" overview is displayed.

2 Turn the adjusting dial and select the desired parameter:

Lower gas flow limit
Setting range: 0.5 - 30.0 l/min
Factory setting: 7.0 l/min

Max. time of gas deviation
Setting range: off / 0.1 - 10.0 s
Factory setting: 2.0 s

Gas factor sensor
Setting range: auto / 0.90 - 20.00

Overview of important gas factors:
1.00 - C1 (CO_2)
1.52 - M21 ArC-18
1.69 - M12 ArC-2.5
1.72 - I1 (Argon)
11.8 - I2 (Helium)

Factory setting: auto

NOTE!

If the wrong gas factor is set, this can have a massive impact on the gas flow rate and therefore the welding result.
All the standard gases from the Fronius welding database are considered under the "auto" setting.
▶ Setting the gas factor manually is only advisable for special gases, and only after consultation.

3 Press the adjusting dial (blue background)
4 Turn the adjusting dial to change the parameter value (blue background)
5 Select "OK" to conclude the settings

Motor force monitoring

1 Select Process parameters / Components & Monitoring / Motor force monitoring

The "Motor force monitoring" overview is displayed.

2 Turn the adjusting dial and select the desired parameter:

Wire feed force monitoring

Setting range:
Ignore (no response)
Warning (a warning is displayed)
Error (welding process is interrupted, an error message is displayed
)Factory setting: Ignore

Maximum force
Setting range: 0 - 999 N
Factory setting: 0 N

Max. time of force deviation
Setting range: 0.1 - 10.0 s
Factory setting: 3 s

3 Press the adjusting dial (blue background)

4 Turn the adjusting dial to change the parameter value (blue background)

5 Select "OK" to conclude the settings

Wire buffer monitoring

The parameters for wire buffer monitoring are available if there is a wire buffer in the welding system.

1 Select Process parameters / Components & Monitoring / Wire buffer monitoring

It is possible to set the reaction in case of an empty wire buffer:

Error / After seam end / Ignore
Factory setting: Error

Error
If the wire buffer is empty, welding is interrupted and an error message is displayed.

After seam end
An error message is displayed after the current weld is completed, and a further weld start is prevented.

Ignore
No reaction when wire buffer is empty

2 Push and turn the adjusting dial and select the desired parameter

3 Select "OK" to conclude the settings

Process parameters, Job

Overview – Process parameters, Job

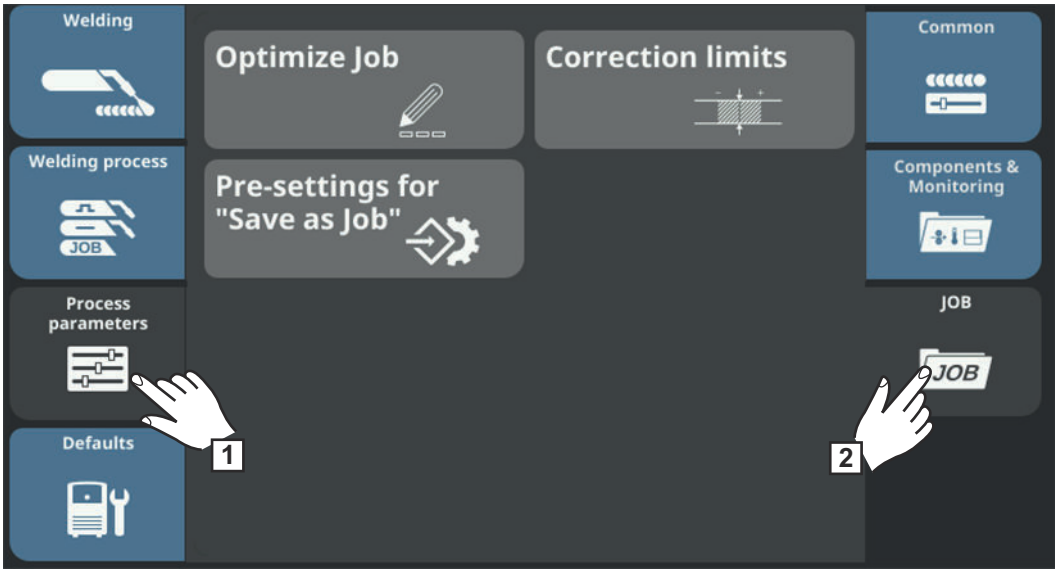

Optimising job process parameters

The following process parameters can be set for job optimisation:

Job parameter

Wire speed
for adjusting the wire speed

e.g. 2 - 25 m/min (ipm)
(depending on wire speed and welding characteristic)

Arclength correction
for correcting the arc length

-10.0 - +10.0

- .... short arc
0 ... uncorrected arc length
+ ... longer arc

Pulse correction
for MIG/MAG pulse synergic welding, PMC welding for correction of the pulse energy

-10.0 - +10.0

- ... lower droplet detachment force
0 ... neutral droplet detachment force
+ ... increased droplet detachment force

Or

Dynamic correction
for MIG/MAG standard synergic welding, LSC welding and CMT welding to adjust the short circuit current and the current to short-circuit break-up

-10.0 - +10.0

-10
harder arc (higher current in case of short-circuit break-up, increased welding spatter)

+10
softer arc (lower current in case of short-circuit break-up, less welding spatter forms)

Welding process parameters

Change characteristic - current ID: xxxx
The ID no. of the currently stored characteristic is displayed.

After pressing the dial, the method and property of the characteristic can be changed.

Process
The process assigned to the characteristic is displayed.

Property
The property assigned to the characteristic is displayed.

Trigger mode
for setting the operating mode

2-step / 4-step / S2-step / S4-step / spot welding

The other adjustable process parameters correspond to the process parameters already described:

Weld-Start/ Weld-End ... see page 144
- Starting current
- Start arc length correction
- Start current time
- Slope 1
- Slope 2
- Final current
- End Arclength correction
- End current time
- SFI
- SFI HotStart
- Wire withdrawal

Spot welding ... see page 160
- Spot welding time

Process control ... see page 147
- Penetration stabilizer
- Arc length stabilizer

SynchroPulse ... see page 153
- SynchroPulse
- Delta wire feed
- Frequency
- Duty cycle (high)
- Arc length correction high
- Arc length correction low

Process mix settings ... see page 156
- High power time corr.
- Low power time corr.
- Low power corr.

CMT Cycle Step ... see page 160
Only if the OPT/i CMT Cycle Step option is present on the power source.
- CMT Cycle Step
- Cycles (Spot size)
- Interval break time
- Interval cycles

Gas-Setup ... see page 146
- Gas pre-flow
- Gas post-flow
- Command value gas
- Gas factor

Power
- Upper power correction limit
- Lower power correction limit

Arc length correction ... see page 177
- Upper arc length correction limit
- Lower arc length correction limit

Job slope ... see page 177
- Job slope

Documentation ... see page 203
- Sampling rate

Limit monitoring ... see page 177
(only in conjunction with the OPT/i Limit Monitoring option)
- Voltage command value
- lower voltage limit
- upper voltage limit
- Max. time of voltage deviation
- Current command value
- lower current limit
- upper current limit
- Max. time of current deviation
- Wfs command value
- lower wfs limit
- upper wfs limit
- Max. time of wfs deviation
- Welding duration command value
- Lower welding duration limit
- Upper welding duration limit
- Welding time monitoring
- Energy command value
- Lower energy limit
- Upper energy limit
- Energy monitoring
- Limit reaction

Components ... see page 166
- Inching value

NOTE!

In addition to setting the parameters, jobs can also be renamed, copied and deleted under "Optimize job" with the help of the corresponding buttons.

Further information on optimising jobs can be found in the "Welding mode" section, under "Job Mode" on page 121.

Process parameters for correction limits

The following process parameters can be set for the job correction limits:

Power

Upper power limit
For setting the upper power limit for a job

0 - 20%
Factory setting: 0%

Lower power limit
For setting the lower power limit for a job

-20 - 0%
Factory setting: 0%

Arc length correction

Upper arc length correction Limit
for setting the upper arc length correction limit for a job

0.0 - 10.0
Factory setting: 0

Lower arc length correction Limit
for setting the lower arc length correction limit for a job

-10.0 - 0.0
Factory setting: 0

Further information on optimising jobs can be found in the Job correction limits section, under Job Mode on page 127.

Process parameters for "Save as Job" pre-settings

After confirming the displayed information, the following process parameters can be set for the "Save as Job" pre-settings:

Job slope

Job slope
defines the time between the job that is currently selected and the next job

0.0 - 10.0 s
Factory setting: 0 s

MIG/MAG job correction limit

Upper power correction limit

0 - 20%
Factory setting: 0%

Lower power correction limit

0 - -20%
Factory setting: 0%

Upper arc length correction limit

0.0 - 10.0
Factory setting: 0.0

Lower arc length correction limit

0.0 - -10.0
Factory setting: 0.0

Limit Monitoring
(only in conjunction with the OPT/i Limit Monitoring option)

Lower voltage limit
for setting the lower voltage limit as a function of the set value

-10.0 - 0.0 V
Factory setting: 0 V

Upper voltage limit
for setting the upper voltage limit as a function of the set value

0.0 - 10.0 V
Factory setting: 0 V

Maximum duration of voltage deviation
for setting the maximum duration of a voltage deviation

off / 0.1 - 10.0 s
Factory setting: off

Lower current limit
for setting the lower current limit as a function of the set value

-100.0 - 0.0 A
Factory setting: 0

Upper current limit
for setting the upper current limit as a function of the set value

0.0 - 100.0 A
Factory setting: 0

Maximum duration of current deviation
for setting the maximum duration of a current deviation

off / 0.1 - 10.0 s
Factory setting: off

Lower wire speed limit
for setting the lower wire speed limit

-10.0 - 0.0 m/min (ipm)
Factory setting: 0 m/min

Upper wire speed limit
for setting the upper wire speed limit

0.0 - 10.0 m/min (ipm)
Factory setting: 0 m/min

Maximum duration of wire speed deviation
for setting the maximum duration of a wire speed deviation

off / 0.1 - 10.0 s
Factory setting: off

Lower welding duration limit
for setting the lower welding duration limit

0.0 ... -50.0 s
Factory setting: 1.0

Upper welding duration limit
for setting the upper welding duration limit

0.0 - 50.0 s
Factory setting: 1.0

Welding duration monitoring
to enable/disable welding duration monitoring

on / off
Factory setting: on

Lower energy limit
for setting the lower energy limit

0.0 ... -max
Factory setting: -1.0

Upper energy limit
for setting the upper energy limit

0.0 - max
Factory setting: 1.0

Energy monitoring
to enable/disable energy monitoring

on / off
Factory setting: on

Limit reaction
for setting the reaction if the limit values are exceeded or undercut

Ignore / Warning / Error
Factory setting: Ignore

Ignore
Limit values will not be monitored or logged in the logbook

Warning
If the limit values are exceeded or undercut, a warning will show on the display and the welding process will not be interrupted.

Error
If the limit values are exceeded or undercut, the welding process will stop immediately and an error message will show on the display.

Defaults

Defaults

General

NOTE!

As a result of firmware updates, you may find that there are functions available on your device that are not described in these operating instructions or vice versa.
Certain illustrations may also differ slightly from the actual controls on your device, but these controls function in exactly the same way.

⚠ **WARNING!**

Danger due to incorrect operation and incorrectly performed work.
This can result in serious injury and damage to property.

- ▶ All the work and functions described in this document must only be carried out by technically trained and qualified personnel.
- ▶ Fully read and understand this document.
- ▶ Read and understand all safety rules and user documentation for this device and all system components.

Overview

"Defaults" contains the following options:

- View
- System
- Documentation
- Administration

Defaults - view

Defaults view

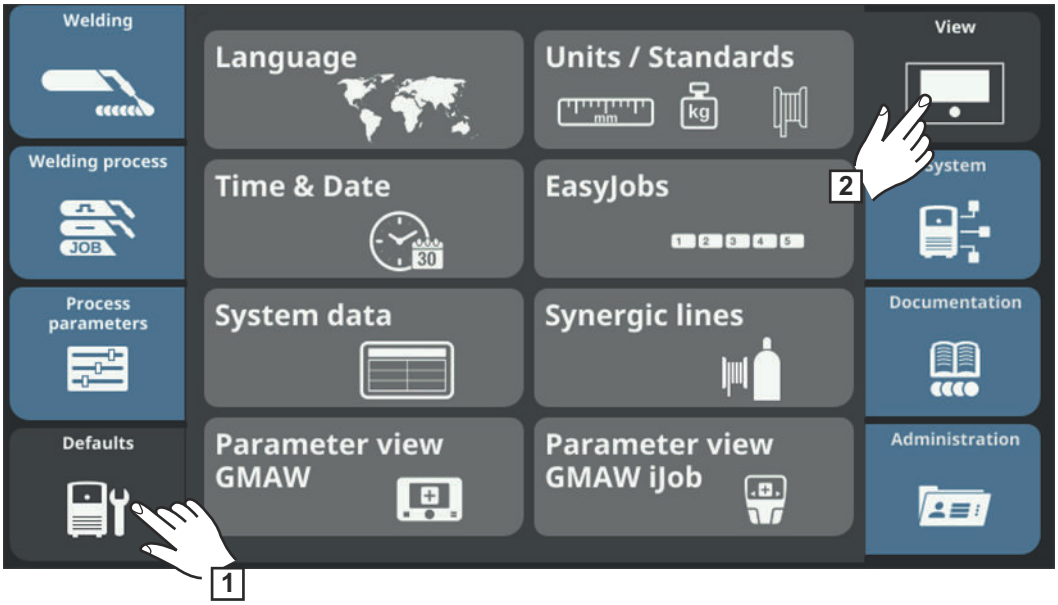

Setting the language

1 Select Defaults / View / Language
2 Turn the adjusting dial and select the desired language
3 Select OK / press the adjusting dial

Setting units / standards

1 Select Defaults / View / Units / Standards
2 Select the desired unit
3 Select the desired standard:

EN
Name of filler metal according to European standards
(e.g. AlMg 5, CuSi3, Steel, etc.)

AWS
Name of filler metal according to the American Welding Standard
(e.g. ER 5356, ER CuSi-A, ER 70 S-6, etc.)

4 Select the desired display of the welding data at the end of welding

Hold
The current actual values at the end of welding are displayed.

Mean
The average values over the entire main current phase are displayed.

5 Select "OK"

An overview of units and standards is displayed.

Setting the time and date

The time and date can either be set using the NTP (Network Time Protocol) or manually.

1 Select "Defaults / Display / Time & Date"

Setting the time and date using the NTP
A DNS server must be available, or the network parameters must be configured correctly if setting the time and date manually (see "Setting network parameters manually", page 195).

2 Select "Automatic Time & Date"

3 Enter the address of the local time server
Ask your IT administrator for the address of the local time server or use the internet (e.g. pool.ntb.org).

4 Enter the time zone
The time zone must correspond to the location of the welding machine.

5 Select "Time server test" to start the time synchronisation

The welding machine is synchronised with the time on the NTP server. If the NTP has been set up, the time will be synchronised each time the welding machine is started, as long as a connection to the time server can be established.

6 Select "Apply"

Setting the time and date manually
In order to be able to set the time and date manually, "Automatic Time & Date" must not be selected.

2 Turn the adjusting dial and select the desired parameter:
Year / Month / Day / Hour / Minute
(white background)

3 Press the adjusting dial to change the parameter (blue background)

4 Turn the adjusting dial and set the desired value (blue background)

5 Press the adjusting dial and apply the set value (white background)

6 Select "OK" / press the adjusting dial

The default view settings are displayed.

Retrieving system data

1 Select Defaults / View / System data

The current system data is displayed.

	Arc power from real-time values in kW IP delivers the correct mean value of the arc power due to the high sample measuring rate during non-continuous welding processes. If the welding speed is known, the electrical energy per unit length can be calculated: E = IP / vs E Electrical energy per unit length in kJ/cm IP Arc power in kW vs Welding speed in cm/s
	Arc energy in kJ IE delivers the correct total arc energy due to the high sample measuring rate during non-continuous welding processes. The arc energy is total arc power during the entire welding time. If the weld seam length is known, the electrical energy per unit length can be calculated: E = IE / L E Electrical energy per unit length in kJ/cm IE Arc energy in kJ L Length of the weld seam in cm The arc energy is preferably used during manual welding to calculate the energy per unit length.
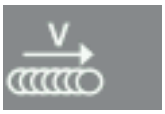	Current welding speed in cm/min
	Job currently set
	Current weld seam
	Duration of the current weld seam in s
	Current motor current in A, wirefeeder 1 (wirefeeder next to the arc)

	Current motor current in A, wirefeeder 2 (e.g. the rear wirefeeder in a push-pull system)
	Current motor current in A, wirefeeder 3 (e.g. an unreeling wirefeeder in a push-pull system with unreeling wirefeeder)
	Current motor force in N, wirefeeder motor 1
	Current motor force in N, wirefeeder motor 2
	Current motor force in N, wirefeeder motor 3
	Current flow rate in l/min on the cooling unit (with built-in OPT/i CU flow temperature sensor option) Error output if flow rate < 0.7 l/min
	Current shielding gas flow rate (if OPT/i gas controller option is available)
	Total shielding gas consumption (if OPT/i gas controller option is available)
	Current coolant temperature in °C on the cooling unit (with built-in OPT/i CU flow temperature sensor option) Error output if coolant temperature > 70 °C (measured during coolant return)
	Arc time in h
	Total welding machine operating hours in h

2 Select "OK" to exit the system data

The default view settings are displayed.

Displaying characteristics

1 Select Defaults / View / Synergic lines

The options for displaying the characteristics are displayed.

2 Select desired display option

Display current characteristics:
Only the current characteristics are displayed in the material settings.

Display replaced characteristics:
Older characteristics that have been replaced are also displayed in the material settings, as well as the current characteristics. These can also be selected while setting the material settings.

3 Select "OK"

The default view settings are displayed.

MIG/MAG parameter display

In the case of the MIG/MAG welding parameters, this function enables additional parameters or settings to be displayed.

Job parameters
Current, voltage, material thickness, power, arc length correction, pulse correction or dynamic correction

VELO
Velo, Welding speed "Velo", Wire retract "Velo"

SFI parameters
SFI, SFI HotStart

Process control
Penetration stabilizer, arc length stabilizer

SynchroPulse settings
SynchroPulse, Delta wire speed, frequency, duty cycle (high), arc correction high, arc correction low

Interval settings
Interval, interval cycles, interval pause time, stitch welding time

Process mix
Upper power duration correction, lower power duration correction, lower power correction

Cycle Step
CMT Cycle Step, cycles (welding spot size), interval pause time, interval cycles

AC settings
AC power balance, AC cycles negative, AC cycles positive

Start/end of welding settings
Starting current, starting arc length correction, starting current time, slope 1, slope 2, final current, end arc length correction, end current time

Spot welding settings
Spot welding time

Gas defaults
Command value gas, gas pre-flow, gas post-flow

TWIN process control
Pulse synchronisation ratio, lead/trail phase shift, trail ignition delay

Additive process control
Power correction, deposition rate stabilizer, deposition rate stabilizer arc-force dynamic

Display additional parameters:

1. Select Defaults / View / MIG/MAG parameter view
2. Turn the adjusting dial and select the desired parameter
3. Press the dial
4. Select "OK" to exit the MIG/MAG parameter display setup

The parameter is displayed in the welding parameters, where it can now also be modified.

JobMaster MIG/MAG display

This function is used to set the functions and parameters available on a JobMaster welding torch.

Job parameters
Job number, EasyJobs, current, wire speed, voltage, material thickness, power, arc length correction, pulse correction or dynamic correction

Welding process parameters
Process, characteristic property, trigger mode

VELO
Velo, welding speed "Velo", wire retract "Velo"

SFI parameters
SFI, SFI HotStart

Process control
Penetration stabilizer, arc length stabilizer

SynchroPulse settings
SynchroPulse, Delta wire speed, frequency, duty cycle (high), arc correction high, arc correction low

Interval settings
Interval, interval cycles, interval pause time, stitch welding time

Process mix
Upper power duration correction, lower power duration correction, lower power correction

Cycle Step
CMT Cycle Step, cycles (welding spot size), interval pause time, interval cycles

AC settings
AC power balance, AC cycles negative, AC cycles positive

Start/end of welding settings
Starting current, starting arc length correction, starting current time, slope 1, slope 2, final current, end arc length correction, end current time

Spot welding settings
Spot welding time

Gas defaults
Command value gas, gas pre-flow, gas post-flow

General settings
R/L alignment, wire forwards/backwards, gas test

Setting parameters for the JobMaster welding torch:

1. Select Defaults / View / JobMaster MIG/MAG display
2. Turn the adjusting dial and select the desired parameter
3. Press the dial
4. Select OK to exit the iJob parameter view

The parameter is displayed on the JobMaster welding torch, where it can now also be modified.

Defaults - System

Defaults - System

NOTE!

Depending on the device type, equipment or WeldingPackages available, the display and sequence of system defaults may vary.

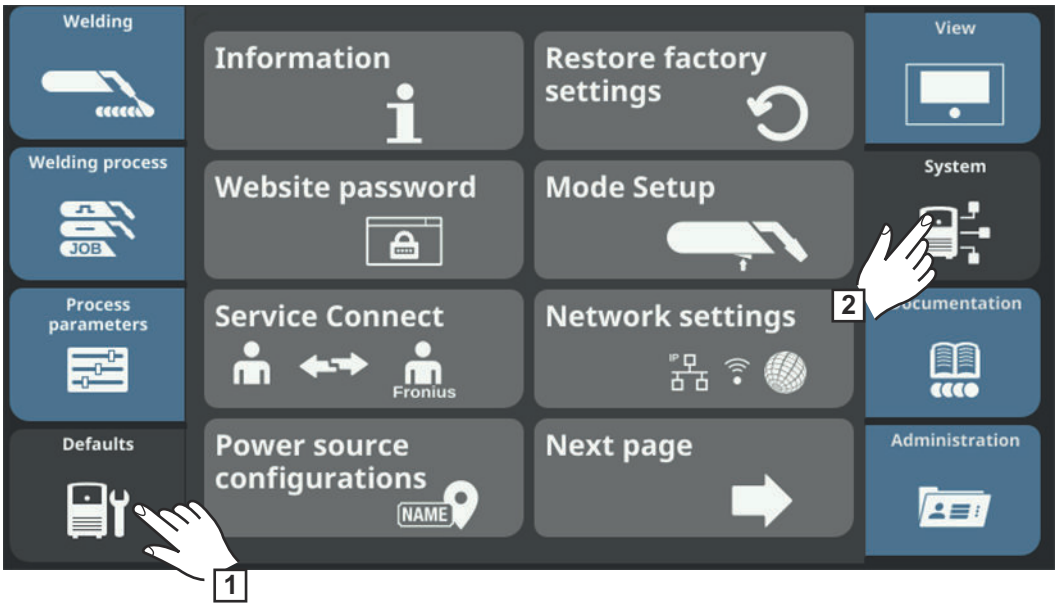

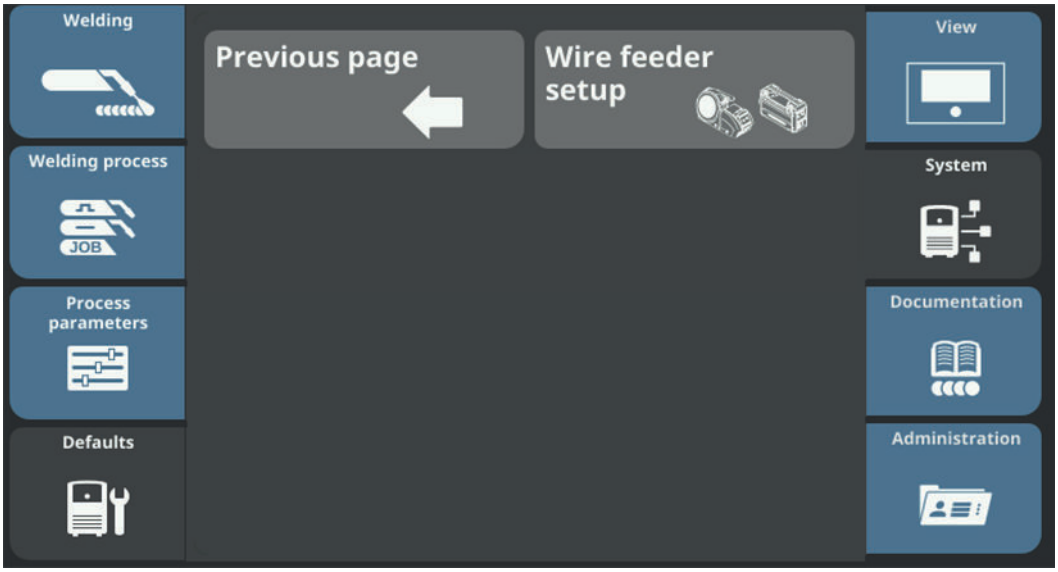

Retrieving device information

1 Select Defaults / System / Information

The device information is displayed.

2 Select "OK"

Restore factory settings

1 Select Defaults / System / Restore factory settings

A confirmation prompt for the factory settings is displayed.

2 Select "Yes" to reset the values to their factory settings

The process parameters and machine preset values are reset to the factory settings, an overview of the machine presets is displayed.

Restoring the website password

1 Select Defaults / System / Website password.

A confirmation prompt asking whether you really want to reset the website password is displayed.

2 Select "Yes" to reset the website password to the factory setting

The website password is reset to the factory setting.
The system overview of the default settings is displayed.

Factory settings

a) For devices supplied with firmware version ≥ 4.3.15:
User name = admin
Password = 20-digit number on the welding machine rating plate (unique password)

b) For devices supplied with an earlier version:
User name = admin
Password = admin

In the case of devices supplied with earlier versions, the factory setting is always admin / admin regardless of any firmware updates.

Mode Setup: Setting the special 4-step "Guntrigger", special display for JobMaster, spot welding and torch trigger job selection

In the default settings, the following special functions can be set under "Mode Setup":
- Special 4-step "Guntrigger" for a JobMaster welding torch *
- JobMaster special display for a JobMaster welding torch *
- 2-step or 4-step mode for spot welding
- Torch trigger job selection for a welding torch

* Only if the OPT/i GUN Trigger option is available on the welding machine.

1 Select Defaults / System / Mode Setup
2 Turn the adjusting dial and select the desired special function (white background)
3 Press the adjusting dial (blue background)
4 Turn the adjusting dial to activate/deactivate the special function
5 Select OK

Special 4-step = Guntrigger

With a JobMaster welding torch and with special 4-step mode selected, this function allows you to change jobs via the torch trigger during welding. Job changing takes place within defined job groups.
A job group is defined by the next non-programmed job.

Example:
Job group 1: Job no. 3 / 4 / 5
Job no. 6 is not assigned ==> End of job group 1
Job group 2: Job no. 7 / 8 / 9

- When welding starts, the job with the lowest number within the job group is automatically selected.
- To change to the job with the next highest number within a job group, press the torch trigger briefly (< 0.5 seconds).
- To stop welding, press the torch trigger for more than 0.5 seconds.
- To change to the next job group, press the parameter setting button on the JobMaster welding torch for more than 5 seconds.



Special JobMaster display = on

The following can now be set and carried out on the JobMaster welding torch:
- Operating mode
- SynchroPulse
- Gas test

NOTE!

The parameter "Special JobMaster display" is no longer available as of firmware version 4.0.0.
The corresponding settings can be implemented as follows:
▶ Defaults / Display / JobMaster MIG/MAG display (see page 189)

Spot welding

2-step = spot welding in 2-step mode:
The spot welding process runs for as long as the torch trigger is kept pressed and ends no later than at the expiry of the spot welding time.
Releasing the torch trigger stops the spot welding process before the spot welding time expires.

4-step = spot welding in 4-step mode:
The spot welding process starts once the torch trigger is pressed and ends no later than at the expiry of the spot welding time.
Press the torch trigger again to stop the spot welding process before the spot welding time expires.

More information on spot welding:
- Page 109 (spot welding in general)
- Page 160 (spot welding time)

Torch trigger job selection = on

This function allows the user to change to the next job using the torch trigger.
Job changing takes place within defined job groups.
A job group is defined by the next non-programmed job.

Example:
Job group 1: Job no. 3 / 4 / 5
Job no. 6 is not assigned ==> End of job group 1
Job group 2: Job no. 7 / 8 / 9

- When welding starts, the job with the lowest number within the job group is automatically selected.
- To change to the job with the next highest number within a job group, press the torch trigger briefly (< 0.5 seconds).
- To stop welding, press the torch trigger for more than 0.5 seconds.
- To switch to the next job group, press the torch trigger briefly twice (< 0.3 s, 2 x).

You can switch jobs when the device is in standby or during welding.

Service Connect

Service Connect is a remote maintenance tool for fault diagnosis and troubleshooting, data analysis and process optimisation on the welding machine.
After accepting the terms of use directly on the control panel of the welding machine, a Fronius technician can access the welding machine remotely.

Procedure when a problem arises on the welding machine for which remote diagnostics are requested from Fronius:

1 Select Defaults / System / Service Connect

2 Follow the displayed instructions and select "Next"

The welding machine establishes a secure VPN connection to Fronius.
Once the connection has been successfully established, a code is shown on the display and the green double arrow symbol is shown in the status bar.

3 Pass this code on to Fronius by telephone

4 Select "Finish"

Fronius support can begin.
The remote operation carried out by the Fronius technician is recorded by Fronius using a video log.

End remote operation:

1 Select Defaults / System / Service Connect

The prompt to disconnect the connection is displayed.

2 Select "Next"

The connection is disconnected, the Fronius technician no longer has access to the welding machine.

A confirmation about the disconnection of the network connection is displayed, the double arrow symbol in the status bar is no longer displayed.

Network settings

The network settings contain the following entries:
- Network
- WLAN
- Bluetooth settings
- WeldCube Air
- Client authorization
- USB port

Setting network parameters manually

1 Select Defaults / System / Network settings / Network

If DHCP is enabled, the IP address, Network mask, Standard gateway, DNS Server 1 and DNS Server 2 network parameters are greyed out and cannot be adjusted.

2 Turn the adjusting dial and select "DHCP"

3 Press the adjusting dial

DHCP is disabled, the network parameters can now be set.

4 Turn the adjusting dial and select the desired network parameter

5 Press the adjusting dial

The numerical pad for the selected parameter is displayed.

6 Enter a value for the network parameter

7 Select "OK" and confirm the value for the network parameter / press the adjusting dial

8 Select "Store" to apply changes to the network

The value for the network parameter is applied, the network settings are displayed.

WLAN

1 Select Defaults / System / Network settings / WLAN

The WLAN setup overview is displayed.

Setup country code

1 Select "Setup country code"
2 Press the adjusting dial
3 Turn the adjusting dial and select the corresponding country
4 Select "OK"

Activating WLAN

1 Select "Enable WI-Fi"

When WLAN is enabled, a check mark appears in the button and the "Add network" and "Delete network" buttons are active.

Adding a network

1 Select "Add network"

The available WLAN networks are displayed.

2 Turn the adjusting dial and select the desired WLAN network
3 Press the adjusting dial or select "Insert"
4 Enter data:
- Enable DHCP
  or
- Manually enter IP address, network mask, default gateway, DNS Server 1 and DNS Server 2:
  Turn the dial and select the desired element,
  press the setting dial,
  enter the data using the numeric keypad,
  confirm with "OK"

5 Select "OK" and add as WLAN network

Deleting a network

1 Turn the adjusting dial and select the WLAN network to be deleted
2 Select "Delete network"
3 Confirm security prompt

The WLAN network will be deleted.

Bluetooth settings

General

Each Bluetooth device has its own MAC address. This MAC address can be used to assign the devices to specific welding machines, preventing mix-ups.

The welding machine is able to communicate with the following Bluetooth devices:
- Remote control RC Panel Basic /BT
- Pedal remote control RC Pedal TIG /BT
- Welding helmet Vizor Connect /BT

An active Bluetooth connection is indicated in the status bar on the display when the Bluetooth symbol lights up blue.

For safety reasons, when using Bluetooth devices of the same type, only one device can be actively connected to the welding machine.
It is possible to establish multiple active Bluetooth connections when using Bluetooth devices of different types.

An existing, active Bluetooth connection cannot be interrupted or influenced by another Bluetooth device.

If the connection between a wired or Bluetooth remote control and the welding machine is interrupted during the welding process, the welding process is ended.

Running Bluetooth setup

1 Select Defaults / System / Network Setup / Bluetooth setting

The overview of the Bluetooth devices is displayed.

Activating or deactivating the welding machine Bluetooth function
- Select the "Activate Bluetooth" button

Adding a Bluetooth device
- Switch on the Bluetooth device
- Select the "Add device" button

  All Bluetooth devices detected are displayed in a list along with their names, MAC addresses and additional information.

- Use the adjusting dial to select the desired Bluetooth device
- Compare the MAC address displayed with the MAC address on the device Select the "Add" button to establish an active connection to the selected device
- Select the "Save" button

  The active connection is displayed under Info.

Symbols displayed under Info:



Active Bluetooth connection
An active change can be made to the welding machine via the Bluetooth device.
Depending on the availability of the data, additional information is also displayed, such as the battery status, signal strength, etc. of the Bluetooth device.

Paired
The Bluetooth device has already been actively connected to a welding machine at least once and appears in the list of the Bluetooth devices.

Inactive
A new Bluetooth device has been detected or the Bluetooth device was removed by the user.

Deleting the Bluetooth device
- Use the adjusting dial to select the Bluetooth device to be deleted
- Select the "Delete device" button
- When prompted, confirm that you want to delete the device with "OK"

2 Select "OK" to exit Bluetooth setup

WeldCube Air

WeldCube Air is a cloud-based centralised collection of welding data, process metrics and other functionalities.
WeldCube Air is available as an online service.

NOTE!

Knowledge of network technology is required to set up WeldCube Air. Contact your IT department.
Before connecting to WeldCube Air:

- ▶ Unlock the following ports and domains
  https://dps.prod.air.az.weldcube.com/ Port 443 (HTTPS)
  https://stpwwcpcprod001.blob.core.windows.net/ Port 443 (HTTPS)
  https://stpwwcashared.blob.core.windows.net/ Port 443 (HTTPS)
  Port 8883 (MQTT)
- ▶ Activate the time server
  Select Defaults / Display / Date & Time / Automatic Time & Date
  With manual time setting, the time deviation must not exceed 2 minutes.

1 Select Defaults / System / Network settings / WeldCube Air
2 Select Enable WeldCube Air



3 Confirm consent for data transfer

The device code and the QR code are displayed:



4 Scan the QR code
or
go to the **air.weldcube.com** web page and select Add machine / Continue and enter the device machine code

The welding machine is connected to WeldCube Air.

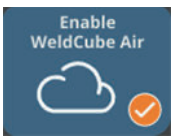

Disable WeldCube Air
Pairing between welding machine and WeldCube Air remains unaffected, no data is sent.

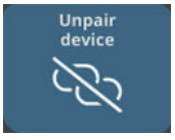

Unpair device
The welding machine is disconnected from WeldCube Air - no data transfer, no pairing.

Further information on WeldCube Air is available at:
https://www.weldcube.com

Client authorization

Increased connection security
To increase the connection security between WeldCube Premium and the welding system, an existing connection to WeldCube Premium can be confirmed under Client authorization.

Confirm connection:

1 Select Defaults / System / Network settings / client authorization

The existing connections to WeldCube Premium are displayed with WeldCube Premium ID, URL and the connection security status.

 Status of the extended connection unknown

 Extended connection pending

 Extended connection permitted

2 Select the desired WeldCub Premium connection by turning the adjusting dial

3 Press the adjusting dial or select "OK"

4 Confirm when prompted

USB port

1 Select Defaults / System / Network settings / USB port

2 Press the adjusting dial

3 Select the desired setting for the USB port on the control panel by turning the adjusting dial:

off:
No data exchange possible on the USB port.

restricted:
Licence-Key and Service-Dongle possible

on:
No restriction on the USB port

4 Press the adjusting dial or select "OK"

The setting is applied.

Welding machine configuration

Power source = welding machine

1 Select Defaults / System / Welding machine configuration

The welding machine configuration is displayed.

2 Turn the adjusting dial and select a configuration location

3 Press the adjusting dial

The keyboard is displayed.

4 Use the keyboard to enter the desired text (max. 20 characters)
5 Select "OK" to confirm the text / press the adjusting dial

The text is applied and the welding machine configuration is displayed.

6 Select "Store" to apply changes

Wire feeder setup

Use "Wire feeder setup" to activate or deactivate potentiometers on a wirefeeder.

Not relevant for TPS 320i C.

Defaults - Documentation

Defaults - Documentation

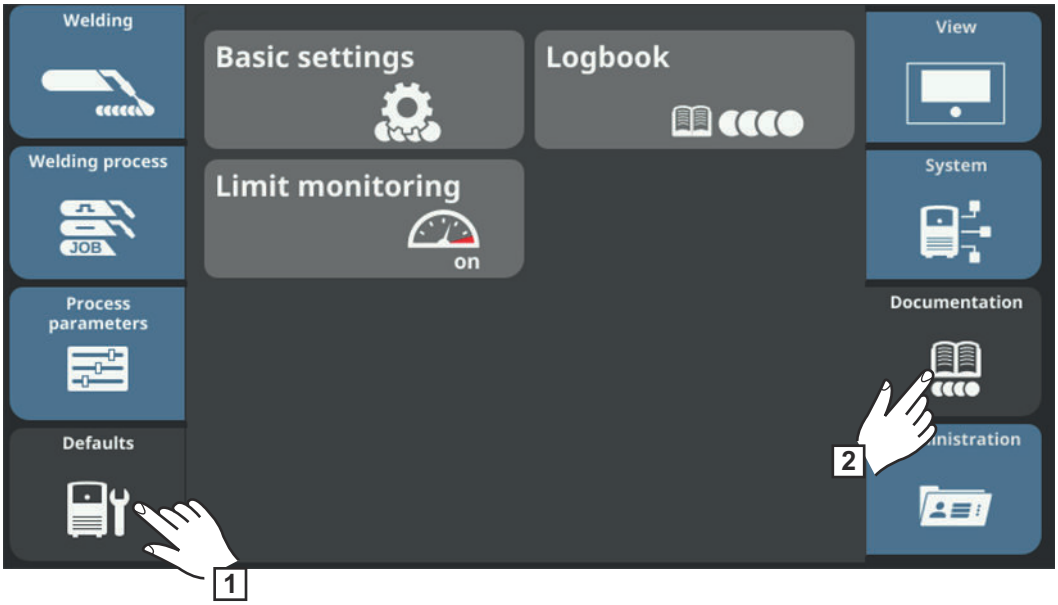

Setting the sampling rate

1 Select Defaults / Documentation / Basic settings

2 Press the adjusting dial

3 Turn the adjusting dial and change the sampling rate value:

off
Sampling rate is deactivated; only average values are stored.

0.1–100.0 s
Documentation is stored with the set sampling rate.

4 Select "OK" to confirm the sampling rate

Viewing the logbook

1 Select Defaults / Documentation / Logbook

The logbook is displayed.
Welding operations, events, errors, warnings or notifications can be displayed using the respective buttons.

The following data is also logged:

No.	ddmmyy	hhmmss	s	A	V	m/min	kJ	Job No.
(1)	(2)	(3)	(4)	(5)	(6)	(7)	(8)	(9)

(1) Welding operation number
(2) Date (ddmmyy)
(3) Time (hhmmss)
(4) Welding duration in s

(5) Welding current in A (average value)
(6) Welding voltage in V (average value)
(7) Wire speed in m/min
(8) Arc energy in kJ (for details see page 186)
(9) Job no.

Turn the adjusting dial to scroll through the list.
Pressing the adjusting dial displays details of a logbook entry.

Details for welds:



(10) (11) (12) (13) (14) (15) (16) (17) (18) (19)

(10) Welding section number
(11) Duration of the welding section in s
(12) Welding current in A (average value)
(13) Welding voltage in V (average value)
(14) Wire speed in m/min
(15) Welding speed (cm/min)
(16) Arc power from real-time values in W (for details see page 186)
(17) Arc energy in kJ (for details see page 186)
(18) Job no.
(19) Process

2 Select "Close" to exit the detailed view
3 Select "OK" to exit the logbook

Activating/deactivating limit value monitoring

1 Select Defaults / Documentation / Limit monitoring

The settings for limit value monitoring are displayed.

2 Press the adjusting dial
3 Turn the adjusting dial and change the value for limit monitoring:

off:
The limit value monitoring is deactivated.

on:
The limit values will be monitored according to the settings

Factory setting:
off

4 Select "OK" to apply the settings for limit value monitoring

The documentation overview is displayed.

Defaults - Administration

Defaults - Administration

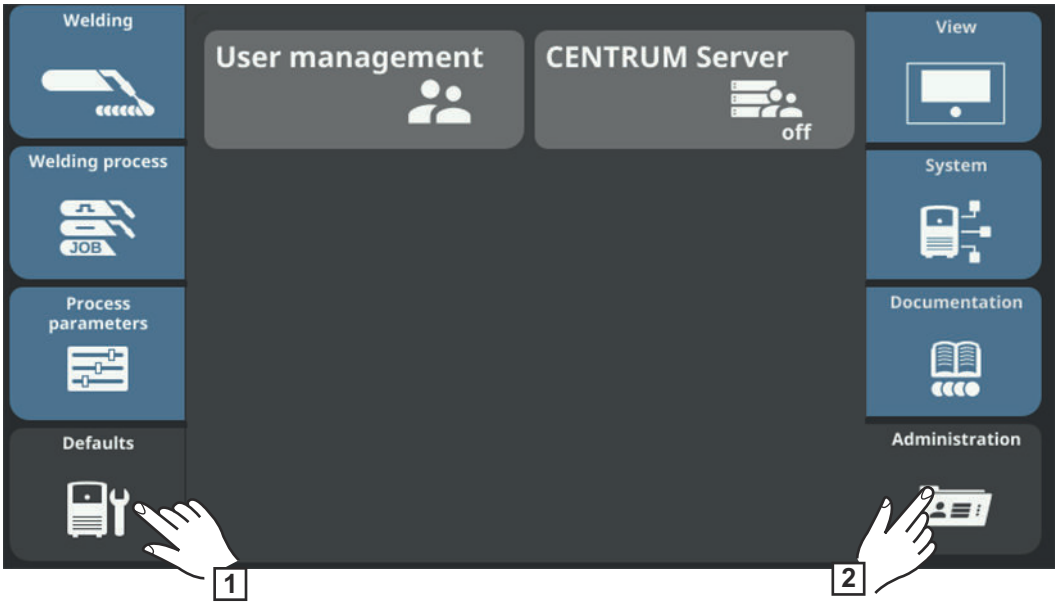

General

User management is advisable if several users work with the same welding machine.
User management works with different roles and the help of NFC keys.

Users are assigned different roles depending on their level of training or qualifications.

Explanation of terms used

Administrator
An administrator has unlimited access rights to all functions on the welding machine. The administrator's duties include:
- Creating roles
- Editing and managing user data
- Assigning access rights
- Updating the firmware
- Backing up data, etc.

User management
User management encompasses all users registered on the welding machine. Users are assigned different roles depending on their level of training or qualifications.

NFC card
An NFC card or an NFC key ring is assigned to a certain user who is registered on the welding machine.
NFC cards and NFC key rings will both be referred to under the general term NFC key for the purpose of these Operating Instructions.

IMPORTANT! Each user should be assigned their own NFC key.

Roles
Roles are used for managing registered users (= user management). Users' access rights and permitted activities are defined by their roles.

Pre-defined roles and users

Under Defaults / Administration / User management, 2 roles are predefined as factory settings:

Administrator
with full rights and options

The "Administrator" role cannot be deleted, renamed or edited.

The "Administrator" role is assigned the pre-defined "Admin" user, which cannot be deleted. The "Admin" user can assign names, languages, units, web passwords and NFC keys.
As soon as "Admin" assigns an NFC key, user management is activated.

Locked
Factory-set with access to welding processes, but not to process parameters and defaults

The "Locked" role
- Cannot be deleted or renamed
- Can be edited to approve different functions according to demand

The "Locked" role cannot have any NFC keys assigned to it.

If no NFC key is assigned to the pre-defined user "Admin", every NFC key will work to lock and unlock the welding machine (no user management, see "Locking and unlocking the welding machine using the NFC key", page 92).

User management overview

User management consists of the following sections:
- Creating the administrator and roles
- Creating a user
- Editing roles / users, deactivating user management

Administrator and creating roles

Recommendation for creating roles and users

Please proceed systematically when creating roles and NFC keys.

Fronius recommends creating one or two administrator keys. In the worst case, a welding machine can no longer be operated without administrator rights.

Procedure

NOTE!

Losing an NFC administrator key can lead to the welding machine becoming unusable, depending on the settings. Keep one of the two NFC administrator keys in a safe place.

1 Create two equivalent users in the "Administrator" role

This means that you will still have access to administrative functions should you lose one of the NFC administrator keys.

2 Consider further roles:
- How many roles are needed?
- Which rights will be assigned to each role?
- How many users are there?

3 Create roles

4 Assign users to roles

5 Check that the created users have access to their respective roles with their NFC keys.

Creating an administrator key

> ***NOTE!***
>
> **Once an NFC key is assigned to the pre-defined "Admin" user under Defaults / Administration / User management / Administrator, user management becomes active.**

1 Select Defaults / Administration / User management

User management is displayed, "Administrator" is selected.

2 Press the adjusting dial
3 Turn the adjusting dial and select "Admin"
4 Press the adjusting dial
5 Turn the adjusting dial and select "NFC card"
6 Press the adjusting dial

The information to be transferred to the NFC card is displayed.

7 Follow the instructions displayed
(hold the new NFC key on the NFC key reader and wait for confirmation of identification)
8 Select "OK"

A note concerning the activated user management is displayed.

9 Select "OK"

Under Admin / NFC card, the number of the assigned NFC key is displayed.

To create a second administrator key:
- Copy "Admin" (to create "new from" see page 210)
- Enter user name
- Assign new NFC card

Creating roles

1 Select Defaults / Administration / User management

User management appears.

2 Select "create role"

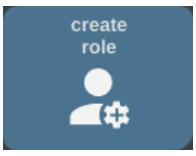

The keyboard is displayed.

3 Use the keyboard to enter the desired role name (max. 20 characters)
4 Select "OK" to apply the role name / press the adjusting dial

The functions that can be executed within a role are displayed.

Symbols:

... hidden

... read only

... read and write

5 Specify the functions that a user can carry out in this role
- Select functions by turning the adjusting dial
- Press the adjusting dial
- Select settings from the list
- Press the adjusting dial

6 Select "OK"

Copy roles

1 Select Defaults / Administration / User management

User management appears.

2 Turn the adjusting dial and select the role to be copied

3 Select "new from"

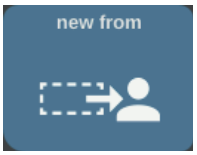

4 Enter a name for the new role using the keyboard

5 Select "OK"

6 Specify executable functions for the role
- Select function by turning the adjusting dial
- Press the adjusting dial
- Select the settings for the functions from the list

7 Select "OK"

Creating a user

Creating a user

NOTE!

For privacy reasons, only person identity numbers and not full names should be entered when creating users.

1 Select Defaults / Administration / User management

User management appears.

2 Select "create user"

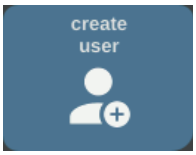

The keyboard is displayed.

3 Use the keyboard to enter the desired user name (max. 20 characters)

4 Select "OK" to confirm the user name / press the adjusting dial

5 Enter further user data
- Select parameters by turning the adjusting dial
- Press the adjusting dial
- Select role, language, unit and standard (norm) from the list
- Enter first name, last name and web password by using the keyboard

6 Turn the adjusting dial and select "NFC card"

7 Press the adjusting dial

The information to be transferred to the NFC card is displayed.

8 Follow the instructions displayed
(hold the new NFC key on the NFC key reader and wait for confirmation of identification)

Copying users

NOTE!

For privacy reasons, only person identity numbers and not full names should be entered when creating users.

1 Select Defaults / Administration / User management

User management appears.

2 Turn the adjusting dial and select the role to which the user to be copied is assigned

3 Press the adjusting dial

4 Turn the adjusting dial and select the user to be copied

5 Select "new from"

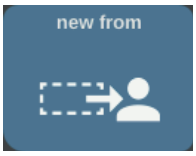

6 Enter a name for the new user using the keyboard

7 Select "OK"

8 Specify further user data

9 Assign new NFC key

10 Select "OK"

Editing roles / users, deactivating user management

Editing roles

1 Select Defaults / Administration / User management

User management appears.

2 Turn the adjusting dial and select the desired role

3 Select "Edit user/role"



The role will open, the functions can be adjusted:
- Select function by turning the adjusting dial
- Press the adjusting dial
- Change the role name using the keyboard
- Select the settings for the functions from the list

4 Select "OK"

If no user is assigned to a role, then the it is possible to start editing the role by pressing the adjusting dial.

Deleting roles

1 Select Defaults / Administration / User management

User management appears.

2 Turn the adjusting dial and select the role to be deleted

3 Select "Delete user/role"

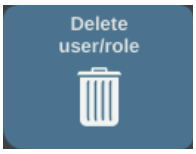

4 Confirm when prompted

The role and all assigned users will be deleted.

Editing users

1 Select Defaults / Administration / User management

User management appears.

2 Turn the adjusting dial and select the role to which the user to be edited is assigned

3 Press the adjusting dial

The users assigned to the role are displayed.

4 Turn the adjusting dial and select the user to be edited

5 Select "Edit user/role" (or press the adjusting dial)



- Select parameters by turning the adjusting dial
- Press the adjusting dial
- Change the name and web password using the keyboard
- Select other settings from the list

Replace NFC card:
- Turn the adjusting dial and select "NFC card"
- Press the adjusting dial
- Select "replace"
- Hold the new NFC key on the NFC key reader and wait for confirmation of identification
- Select "OK"

6 Select "OK"

Deleting users

1 Select Defaults / Administration / User management

User management appears.

2 Turn the adjusting dial and select the role to which the user to be deleted is assigned

3 Press the adjusting dial

4 Turn the adjusting dial and select the user to be deleted

5 Select "Delete user/role"

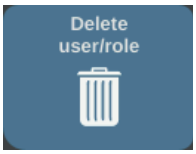

6 Confirm when prompted

The user is deleted.

Deactivating user management

1 Select the pre-defined "Admin" user under Defaults / Administration / User management / Administrator

2 Turn the adjusting dial and select "NFC card"

3 Press the adjusting dial

A confirmation prompt asking whether you want to delete or replace the NFC card is displayed.

NOTE!

If the NFC card is deleted by the predefined "Admin" user, user management is deactivated.

4 Select delete

User management is deactivated, the welding machine is locked.
The welding machine can be locked and unlocked again with any NFC key (see page 92).

Lost NFC administrator key?

Procedure when
- User management is active
- The welding machine is locked
  and
- The NFC administrator key has been lost:

1 Touch the key symbol in the status bar on the display

Information on the loss of the administrator card is displayed.

2 Note the IP address of the welding machine

3 Open the welding machine SmartManager (enter the IP address of the welding machine in a browser)

4 Contact Fronius After-Sales Service

CENTRUM - Central User Management

Activating the CENTRUM server

CENTRUM is a piece of software for the central management of users. Detailed information is available in the CENTRUM Operating Instructions (42,0426,0338,xx).

The CENTRUM server can also be activated directly on the welding machine, as follows:

1 Select Defaults / Administration / CENTRUM Server

The Central User Management Server is displayed.

2 Activate the CENTRUM server (press the adjusting dial)

3 Select CENTRUM server, press the adjusting dial and use the keyboard to enter the address of the CENTRUM server

4 Select the verify CENTRUM button

5 Save

SmartManager - the welding machine website

SmartManager - the welding machine website

General

The welding machines have their own website: SmartManager.
As soon as the welding machine is connected to a computer using a network cable, or is on a network, the welding machine's SmartManager can be retrieved using the welding machine's IP address.
At least IE 10 or a similar modern browser is required to access SmartManager.

The entries displayed on SmartManager may vary depending on system configuration, software upgrades and available options.

Examples of entries displayed:

- Current system data
- Documentation, logbook
- Job data
- Power source* settings
- Backup & restore
- User management
- Signal visualisation
- Overview
- Update
- Function packages
- Characteristics overview
- Screenshot
- Robot interface **

* Power source = welding machine

** Depending on the available robot interface, the name of the interface will be displayed as an entry on the website.

Opening and logging into the welding machine SmartManager





1 Defaults / System / Information ==> Note down the IP address of the welding machine.

2 Enter the IP address in the browser search field.

3 Enter the user name and password.

Factory settings for user name and password

a) For devices supplied with firmware version ≥ 4.3.15:
User name = admin
Password = 20-digit number on the welding machine rating plate (unique password)

b) For devices supplied with an earlier version:
User name = admin
Password = admin

In the case of devices supplied with earlier versions, the factory setting is always admin / admin regardless of any firmware updates.

4 Confirm the displayed notice.

The unique password does not have to be changed when logging in to SmartManager for the first time.

The SmartManager of the welding machine is displayed.

Help function, should you be unable to log in

There are two auxiliary functions when logging on to SmartManager:
- Start unlocking function?
- Forgotten password?

Start unlocking function?

An unintentionally locked welding machine can be unlocked with this function and all its functions made available.

1 Click "Start unlocking function"?
2 Create verification file:
Click on "Save"

A TXT file with the following name will be saved to the computer's "Downloads" folder:

unlock_SN[serial number]_YYYY_MM_DD_hhmmss.txt

3 Send this verification file to Fronius Technical Support by e-mail:
welding.techsupport@fronius.com

Fronius will respond to each e-mail with a one-time unlocking file named as follows:

response_SN[serial number]_YYYY_MM_DD_hhmmss.txt

4 Save the unlocking file to your computer
5 Click on "Search unlocking file"
6 Apply unlocking file
7 Click on "Install unlocking file"

This will work just once to unlock the welding machine.

Forgotten password?

After clicking "Forgotten password?" a notice will be displayed explaining that the password can be reset on the welding machine (see also "Resetting the website password", page 192).

Changing password / logging off

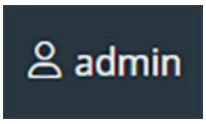

By clicking this symbol
- the user password can be changed
- you can log out of SmartManager

Changing the password for the SmartManager:

1 Enter the old password
2 Enter the new password*
3 Repeat the new password
4 Click on "Save"

* A password must meet the following criteria:
- The password must be at least 10 and at most 16 characters long.
- Three of the following four criteria must be met:
  Uppercase letters A - Z
  Lowercase letters a - z
  Digits 0 - 9
  Special characters , . @ = + - * / ~ " ° _ # ( ) ! ? & % : ;

Settings



Clicking on this symbol expands the display of characteristics, material specifications and certain welding parameters for the welding machine's SmartManager.

The settings depend on which user is currently logged on.

Language selection



The languages available for SmartManager can be displayed by clicking on the language abbreviation.

Bahasa Indonesia	Čeština	Dansk
Deutsch	Eesti	English
Español	Français	Hrvatski
Íslenska	Italiano	Latviešu
Lietuviškas	Magyar	Nederlands
Norsk	Polski	Português
Română	Slovenščina	Slovenský
Srpski jezik	Suomi	Svenska
tiếng Việt	Türkçe	български език
Русский	Українська	हिन्दी
ଓଡ଼ିଆ	தமிழ்	ไทย
한국어	中文	日本語

To change the language, click on the one you would like.

Status indicator

The current status of the welding machine is shown between the Fronius logo and displayed welding machine.



Attention / Warning



Fault on welding machine *



Welding machine is welding



The welding machine is ready (online)



The welding machine is not ready (offline)

* In the event of an error, a red error line complete with error number will be displayed above the line with the Fronius logo.
Clicking on the error line will reveal a description of the error.

Fronius

A click on the Fronius logo opens the homepage of Fronius: www.fronius.com.

Current system data

Current system data

The welding system's current data is displayed.

NOTE!

The system data displayed will vary depending on the welding process, equipment and existing WeldingPackages.

▶ e.g. system data for MIG/MAG:

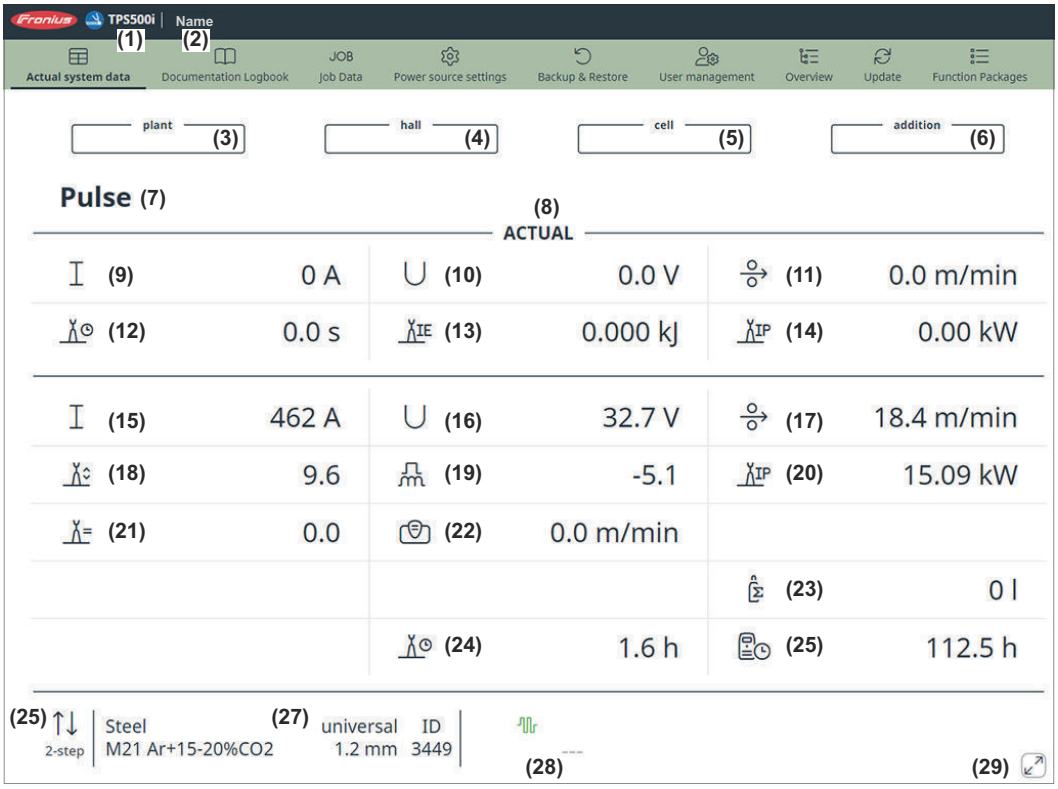

(1) Device type
(2) Device name
(3) Plant
(4) Production building (hall)
(5) Cell
(6) Filler (addition)
(7) Welding process
(8) Actual values / HOLD or average values (depending on setting)
(9) Welding current
(10) Welding voltage
(11) Wire speed
(12) Arc time
(13) Arc energy
(14) Arc power
(15) Welding current command value
(16) Welding voltage command value
(17) Wire feed speed command value
(18) Arc length correction
(19) Pulse/dynamic correction
(20) Arc power
(21) Arc length stabilizer
(22) Penetration stabilizer
(23) Total shielding gas consumption
(24) Total arc time
(25) Total operating hours of the welding machine
(26) Operating mode
(27) Filler metal, shielding gas, characteristic, diameter, ID
(28) Process functions
(29) Full-screen mode

Documentation, logbook

Logbook

The last 100 entries in the logbook are shown in the Documentation entry. These logbook entries can be welding operations, errors, warnings, notifications and events.
Press the "Time filter" button to restrict the data to a specific period of time. To do so, the date (yyyy mm dd) and time (hh mm) are entered in the format from – to in each case.
A blank filter loads the latest welding operations again.
The option to show welding operations, errors, warnings, notifications and events can be deactivated.

The following data is displayed:



(1) (2) (3) (4) (5) (6) (7) (8)

(1) Welding operation number
(2) Start time (date and time)
(3) Welding duration in s
(4) Welding current in A (average value)
(5) Welding voltage in V (average value)
(6) Wire speed in m/min
(7) IP - arc power in W (from real-time values in accordance with ISO/TR 18491)
(8) IE - arc energy in kJ (in total across the entire weld in accordance with ISO/TR 18491)

Robot speed and jobs are also displayed if present in the system.

Clicking on a logbook entry will display details.

Details for welds:

Section no.



(9) (10) (11) (12) (13) (14) (15) (16) (17)

(9) Duration of the welding section in s
(10) Welding current in A (average value)
(11) Welding voltage in V (average value)
(12) Wire speed in m/min
(13) Welding speed (cm/min)
(14) Arc power from real-time values in W (for details see page 186)
(15) Arc energy in kJ (for details see page 186)
(16) Job no.
(17) Process



Further values can be displayed by clicking on the "Insert column" button:

- I max / I min: maximum/minimum welding current in A
- Max power / Min power: maximum/minimum arc power in W
- Start time (welding machine time); date and time
- U max / U min: maximum/minimum welding voltage in V
- Vd max / Vd min: maximum/minimum wire speed in m/min

If the OPT/i documentation option is available on the welding machine, individual welding sections can also be displayed.



This documentation can be exported in the desired format using the "PDF" and "CSV" buttons.
In order to create CSV exports, the OPT/i documentation option must be available on the welding machine.

Basic settings

In the basic settings, the sampling rate for documentation can be activated and set.
In addition, motor force M1 - M3, gas flow actual value and welding speed can be activated for documentation.

Job-Data

Job data

If the OPT/i Jobs option is available on the welding machine, the following is possible in the Job data entry:
- Existing welding system jobs can be viewed *
- Existing welding system jobs can be optimised
- Jobs stored externally can be transferred to the welding system
- Existing jobs in the welding system can be exported as a PDF * or CSV file

* Viewing and exporting as PDF also works when the OPT/i Jobs option is not available on the welding machine.

Job overview

The job overview lists all jobs stored in the welding system.
Clicking on a job displays the data and parameters stored for this job.
Job data and parameters can only be viewed in the job overview. The column width for parameters and values can be easily dragged and adjusted with the mouse pointer.
Other jobs can easily be added to the list with the data listed by clicking on the "Add column" button.



All added jobs are compared to the job that is currently selected.

Editing a job

Existing welding system jobs can be optimised, provided the OPT/i Jobs option is present on the welding machine.

1 Click on "Edit job"
2 Click on the job to be amended in the list of available jobs

The selected job is opened and the following job data is shown:
- **Parameter**
  The parameter currently stored in the job
- **Value**
  The values of the parameter currently stored in the job
- **Change value to**
  To enter the new parameter value
- **Setting range**
  Possible setting range for the new parameter values

3 Amend the values accordingly
4 Save / Delete adjustments, Save as / Delete job



As an aid when editing a job, other jobs can be added with ease to the list with the data displayed by clicking on "Add job".



Creating a new job

1 Click on "Create new job"



2 Enter job data
3 Click on "OK" to apply the new job

Importing a job

This function allows jobs stored externally to be transferred to the welding system, provided the OPT/i Jobs option is available on the welding machine.

1 Click on "Search Job-file"
2 Select desired job file

Individual jobs can be selected and new job numbers assigned in the preview of the job import list.

3 Click on "Import Job"

If the import is successful, a corresponding confirmation is displayed and the imported jobs appear in the list.

Exporting a job

This function allows jobs from the welding machine to be stored externally, provided the OPT/i Jobs option is available on the welding machine.

1 Select jobs to be exported
2 Click on "Export Job"

The jobs are exported as an XML file into the computer's Download folder.

Exporting job(s) as...

Under "Job overview" and "Edit job", existing jobs in the welding system can be exported as PDF or CSV files.
For CSV exports, the OPT/i Jobs option must be available on the welding machine.

1 Click on "Export job(s) as..."



The PDF or CSV settings are displayed.

2 Select the job(s) to be exported:
current job / all jobs / job numbers
3 Click on "Save PDF" or "Save CSV"

A PDF or CSV file containing the selected jobs is created and saved according to the settings of the browser in question.

Welding machine settings

Process parameters

General process parameters and process parameters for welding machine components and monitoring can be viewed and changed under Process parameters.

Changing process parameters

1 Click parameter group / welding parameter
2 Alter the parameter value directly in the display field
3 Save changes

Name & location

The welding machine configuration can be viewed and changed under name & location.

Parameter display

Welding parameters and special functions for the welding machine and JobMaster welding torch can be set under Parameter display.

1 Select parameter / function (tick)
2 Save changes

The selected parameters / functions are:
- Shown under the welding parameters on the welding machine display
- Available on the JobMaster welding torch

Date & time

The date & time can be set automatically or manually.

Network settings

The following parameters can be set under Network settings:

Management
- MAC address and current IP address are displayed.
- If DHCP is not selected, the IP address, network mask, standard gateway, DNS server 1 and 2 can be set manually.

WLAN
- MAC address and current IP address are displayed.
- The WLAN country code can be set.
- Configured networks are displayed.
- Available networks are displayed.

WeldCube Air
Connect the welding machine to WeldCubeAir
(alternatively, click on the cloud icons in the upper right corner)

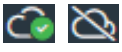

MQTT settings

Only displayed if the OPT/i MQTT option is installed on the welding machine.

MQTT - Message Queuing Telemetry Transport
(standardised data interface protocol)

Supported functions:
- Provides the real-time data to be transferred to other systems
- Fixed amount of data
- Reads

Defining MQTT settings

1. Activate MQTT
2. Enter broker, port and device topic
3. Select safety certificate
4. Enter authentication
5. Save changes

OPC UA settings

Only displayed if the OPT/i OPC UA option is installed on the welding machine.

OPC-UA - Open Platform Communications - Unified Architecture
(standardised data interface protocol)

Supported functions:
- Provides the real-time data to be transferred to other systems
- Possible to copy data from other systems
- Fixed amount of data
- Reads & writes

Defining OPC UA settings

1. Activate OPC UA server
2. Select safety directive
3. Enter authentication
4. Save changes

Backup & Restore

General remarks

In the backup & restore entry

- all welding system data can be saved as a backup (e.g. current parameter settings, jobs, user characteristics, defaults, etc.),
- any backups will be restored to the welding system
- You can select which data you would like to be backed up automatically.

Backup & Restore

Starting backup

1 Click on "Start backup" to save a backup of the welding system data

The data is saved in a selected location in the default format MCU1-YYYYMMDDHHmm.fbc.

YYYY = Year
MM = Month
DD = Day
HH = Hour
mm = Minute

The date and time correspond to the welding machine settings.

Searching for a restore file

1 Click on "Search restore file" to transfer an existing backup to the welding machine

2 Select the file and click on "Open"

The selected backup file is displayed on the welding machine's SmartManager under "Restore".

3 Click on "Start recovery"

Once the data has been successfully restored, a confirmation to this effect is displayed.

Automatic backup

1 Enable interval settings

2 Enter the intervals at which the automatic backup should take place:
- **Interval:**
  daily / weekly / monthly
- **At:**
  time (hh:mm)

3 Enter the data for the backup destination:
- **Protocol:**
  SFTP (Secure File Transfer Protocol) / SMB (Server Message Block)
- **Server:**
  Enter IP address of the destination server
- **Port:**
  Enter port number; if no port number is entered, the default port 22 is automatically used.
  If SMB is set under Protocol, leave the Port field blank.
- **Storage location:**
  This configures the subfolder where the backup will be stored.
  If no storage location is entered, the backup is stored in the root directory of the server.

  IMPORTANT! For SMB and SFTB, always enter the storage location with a slash "/".

- **Domain/user, password:**
  User name and password - as configured on the server;
  When entering a domain, first enter the domain, then backslash "\" and then the user name (DOMAIN\USER)

4 If a connection via proxy server is required, activate and enter the proxy settings:
- Server
- Port
- Users
- Password

5 Save changes

6 Trigger automatic backup

If you have any questions about the configuration, contact your network administrator.

User management

General

In the user management entry
- Users can be viewed, changed and created.
- User roles can be viewed, changed and created.
- Users and user roles can be exported or imported on the welding machine. User management data present on the welding machine is overwritten by importing.
- A CENTRUM server can be activated.

User management is created on a welding machine and can then be saved with the export/import function and transferred to another welding machine.

Users

Existing users can be viewed, changed and deleted; new users can be created.

Viewing/changing a user:

1 Select user
2 Alter the user data directly in the display field
3 Save changes

Deleting a user:

1 Select user
2 Click the "Delete user" button
3 When prompted, confirm with OK

Creating a user:

1 Click the "Create new user" button
2 Enter user data
3 Confirm with OK

User roles

Existing user roles can be viewed, changed and deleted, new user roles can be created

Viewing/changing a user role:

1 Select user role
2 Alter the user role directly in the display field
3 Save changes

The "Administrator" role cannot be changed.

Deleting a user role:

1 Select user role
2 Click the "Delete user role" button
3 When prompted, confirm with OK

The "Administrator" and "Locked" roles cannot be deleted.

Creating a user role:

1 Click the "Create new user role" button
2 Enter a role name, apply values
3 Confirm with OK

Export & import

Exporting users and user roles from a welding machine

1 Click on "Export"

The user management data from the welding machine will be saved to the "Downloads" folder on the computer.
File format: userbackup_SNxxxxxxxx_YYYY_MM_DD_hhmmss.user

SN = Serial number, YYYY = Year, MM = Month, DD = Day
hh = hour, mm = minute, ss = second

Importing users and user roles to a welding machine

1 Click on "Search user data file"
2 Select the file and click "Open"
3 Click on "Import"

The user management data will be saved to the welding machine.

CENTRUM server

For activating a CENTRUM server
(CENTRUM = Central User Management)

1 Activate CENTRUM server
2 In the input field, enter the domain name or IP address of the server where Central User Management has been installed.

A valid DNS server must be configured in the welding machine network settings if using a domain name.

3 Click the "Verify server" button

This checks the availability of the specified server.

4 Save changes

Overview

Overview

In the overview entry, welding system components and options are displayed with all available information, e.g. firmware version, item number, serial number, production date, etc.

Expanding / reducing all groups

Clicking on the button "Expand all groups" displays further details for the individual system components.

Welding machine example:
- TPSi Touch: Item number
  MCU1: Item number, version, serial number, production date
  Bootloader: Version
  Image: Version
  Licences: WP Standard, WP Pulse, WP LSC, WP PMC, OPT/i Guntrigger, etc.
- SC2: Item number
  Firmware: Version

Clicking on the button "Reduce all groups" hides the details for the system components.

Export component overview as ...

Click the "Export component overview as ..." button to create an XML file of the system component details. This XML file can either be opened or saved.

Update

Update

The welding machine firmware can be updated in the "Update" entry.

The current version of the firmware on the welding machine is displayed.

Update welding machine firmware:

Firmware link:
The update file can be downloaded via the link provided:
Firmware TPS/i_iWAVE

1 Organise and save the update file
2 Click on "Search update file" to start the update process
3 Select update file

Click on "Update"

Once the update has been successfully completed, the welding machine may need to be restarted.

When an update has been completed successfully, a confirmation to this effect is displayed.

Searching for an update file (performing the update)

1 After clicking on "Search update file", select the desired firmware (*.ffw)
2 Click on "Open"

The selected update file is displayed on the welding machine's SmartManager under "Update".

3 Click on "Update"

A progress bar is displayed above the update process.
When this reaches 100%, you will be prompted to restart the welding machine.

SmartManager is not available during the restart.
After the restart, SmartManager may not be available any more.
If you select "No", the new software functions are activated when you next switch the device on/off.

4 To restart the welding machine, click on "Yes"

The welding machine restarts; the display goes black for a short time.
The Fronius logo is shown on the welding machine display during the restart.

Once the update has been completed successfully, confirmation and the current firmware version are displayed.
Finally, log back on to SmartManager.

Information on open source licensing

Clicking on the link displays information on open source licensing.

Fronius WeldConnect

The mobile application Fronius WeldConnect can also be called up in the "Update" entry.
WeldConnect is an app for wireless interaction with the welding system.

The following functions can be performed with WeldConnect:
- Current unit configuration at a glance
- Mobile access to the welding machine's SmartManager
- Automatic determination of the output parameters for MIG/MAG and TIG
- Cloud storage and wireless transmission to the welding machine
- Part identification
- Logging in and out of the welding machine without an NFC card
- Saving and sharing parameters and jobs
- Data transfer from one welding machine to another via backup, restore
- Firmware update

Fronius WeldConnect is available in the following forms:
- As an Android app
- As an Apple/iOS app

Further information on Fronius WeldConnect is available at:

https://www.fronius.com/en/welding-technology/innovative-solutions/weldconnect

Function Packages

Function Packages

The following data can be displayed under Function Packages:
- Welding packages available on the welding machine (e.g. WP STANDARD, WP PULSE, WP LSC, etc.)
- DB /i (databases)
- Options available on the welding machine (OPT/i, etc.)
- CFG /i (robot interface configurations)

Installing a function package

1 Organise and save a function package

2 Click on "Search function package file"

3 Select the desired function package file (*.xml)

4 Click on "Open"

The selected function package file is displayed on the welding machine's SmartManager under "Install function package".

5 Click on "Install function package"

Once the function package has been successfully installed, a confirmation to this effect is displayed.

Synergic lines overview

Characteristics overview

In the Characteristics overview entry:

- Available characteristics in the welding system can be displayed: Available characteristics button
- Possible characteristics in the welding system can be displayed: Possible characteristics button
- Characteristics for the welding system can be preselected: Characteristic preselection button
- Saved characteristic preselections can be exported and imported: Export & import button

You can search for, sort and filter the displayed characteristics at any time.

The following information is displayed for the characteristics:

- Status
- Materials
- Diameter
- Gas
- Property
- Process
- ID
- Replaced by
- SFI
- SFI HotStart
- Penetration stabilizer
- Arc length stabilizer
- CMT Cycle Step
- Special
- Requirements

To sort the characteristics in ascending or descending order, click on the arrow next to the respective information.

The column widths can be easily dragged and adjusted with the cursor.

Show filter



Clicking on the "Show filter" symbol displays the possible filter criteria. With the exception of "ID" and "Replaced by", the characteristics can be filtered by all information.

First selection box = select all

To hide the filter criteria, click on the "Hide filter" symbol.

Screenshot

Screenshot

In the Screenshot entry, a digital image of the welding machine display can be created at any time, irrespective of the navigation or set values.

1 Click on "Create screenshot" to capture a screenshot of the display

A screenshot of the currently displayed settings is created.

Different functions are available for saving the screenshot depending on the browser used; the display may vary.

Troubleshooting and maintenance

Troubleshooting

General

The welding machines are equipped with an intelligent safety system, meaning it has been possible to dispense with nearly all fuses. After a possible malfunction has been remedied, the welding machine can be used again as normal.

Possible malfunctions, warning notices or status codes are shown on the display as plain text dialogues.

Danger from electrical current and inadequate ground conductor connection

⚠ WARNING!

Danger from electric current.
This can result in serious injury and damage to property.
- ▶ Before starting maintenance or servicing work, switch off all the devices and components involved and disconnect them from the mains.
- ▶ Secure all the devices and components involved to prevent unintentional restarting.
- ▶ After opening the device, use a suitable measuring instrument to check that electrically charged components (such as capacitors) have been discharged.

⚠ CAUTION!

Danger from inadequate ground conductor connections.
This can result in injury and damage to property.
- ▶ The housing screws provide a suitable ground conductor connection for earthing the housing.
- ▶ The housing screws must not under any circumstances be replaced by other screws without a reliable ground conductor connection.

MIG/MAG welding - current limit

"Current limit" is a safety function for MIG/MAG welding, whereby
- It is possible to operate the welding machine at the power limit
- Process reliability is ensured

If the welding power is too high, the arc gets smaller and smaller and may be extinguished. To stop the arc from being extinguished, the welding machine reduces the wire speed and therefore the welding power.
A corresponding message appears in the status bar on the display.

Corrective measures

- Reduce one of the following welding power parameters:
  Wire speed
  Welding current
  Welding voltage
  Material thickness

- Increase the distance between the contact tip and workpiece

Troubleshooting the welding machine

Welding machine does not function

Mains switch is on, but indicators are not lit up

Cause: There is a break in the mains lead; the mains plug is not plugged in
Remedy: Check the mains lead, ensure that the mains plug is plugged in

Cause: Mains socket or mains plug faulty
Remedy: Replace faulty parts

Cause: Mains fuse protection
Remedy: Change the mains fuse protection

Cause: Short circuit on the 24 V supply of SpeedNet connection socket or external sensor
Remedy: Unplug connected components

No welding current

Mains switch is on, overtemperature is displayed

Cause: Overload; the duty cycle has been exceeded
Remedy: Check duty cycle

Cause: Thermostatic automatic circuit breaker has tripped
Remedy: Wait until the welding machine automatically comes back on after the end of the cooling phase

Cause: Limited supply of cooling air
Remedy: Ensure accessibility to cooling air ducts

Cause: Faulty fan in welding system
Remedy: Contact After-Sales Service

No welding current

Welding machine mains switch is on and indicators are lit

Cause: Grounding (earthing) connection is incorrect
Remedy: Check the grounding (earthing) connection for correct polarity

Cause: There is a break in the power cable in the welding torch
Remedy: Replace welding torch

Nothing happens when the torch trigger is pressed

Mains switch is on, indicators are lit up

Cause: The control plug is not plugged in
Remedy: Plug in the control plug

Cause: Welding torch or welding torch control line is faulty
Remedy: Replace welding torch

Cause: The interconnecting hosepack is defective or not connected properly
(not for welding machines with integrated wire drive)
Remedy: Check the interconnecting hosepack

No protective gas shield

All other functions are OK

Cause: Gas cylinder is empty
Remedy: Change the gas cylinder

Cause: The gas pressure regulator is faulty
Remedy: Replace the gas pressure regulator

Cause: Gas hose is not fitted or is damaged
Remedy: Fit or change the gas hose

Cause: Welding torch is faulty
Remedy: Change the welding torch

Cause: Gas solenoid valve is faulty
Remedy: Contact After-Sales Service

Poor weld properties

Cause: Incorrect welding and/or correction parameters

Remedy: Check the settings

Cause: Poor grounding (earthing) connection

Remedy: Ensure good contact to workpiece

Cause: Multiple welding machines are welding one component

Remedy: Increase the distance between the hosepacks and the return lead cables;
Do not use a common earth.

Cause: Inadequate or no shielding gas

Remedy: Check the pressure regulator, gas hose, gas solenoid valve, torch gas connection, etc.

Cause: Welding torch is leaking

Remedy: Change welding torch

Cause: Wrong contact tip, or contact tip is worn out

Remedy: Replace contact tip

Cause: Wrong wire alloy or wrong wire diameter

Remedy: Check the wire electrode that has been inserted

Cause: Wrong wire alloy or wrong wire diameter

Remedy: Check weldability of the base material

Cause: The shielding gas is not suitable for this wire alloy

Remedy: Use the correct shielding gas

Excessive welding spatter

Cause: Shielding gas, wirefeeder, welding torch or workpiece is contaminated or magnetically charged

Remedy: Perform R/L alignment;
adjust arc length;
check whether shielding gas, wirefeed, welding torch position or workpiece is contaminated or magnetically charged

Irregular wire speed

Cause: Braking force has been set too high

Remedy: Loosen the brake

Cause: Hole in the contact tip is too narrow

Remedy: Use a suitable contact tip

Cause: Faulty inner liner in welding torch

Remedy: Check the inner liner for kinks, dirt, etc. and replace if necessary

Cause: The wirefeeder rollers are not suitable for the wire electrode being used

Remedy: Use suitable feed rollers

Cause: Feed rollers have the wrong contact pressure

Remedy: Optimise the contact pressure

Wirefeed problems

when using applications with long welding torch hosepacks

Cause: Incorrect arrangement of welding torch hosepack

Remedy: Arrange the welding torch hosepack in as straight a line as possible, avoiding bends

Welding torch becomes very hot

Cause: Welding torch is inadequately dimensioned

Remedy: Observe the duty cycle and loading limits

Cause: Only on water-cooled systems: inadequate coolant flow

Remedy: Check coolant level, coolant flow, for coolant contamination, etc. For further information refer to the cooling unit operating instructions

Cause: The distance from the workpiece is too small

Remedy: Increase stickout

Care, maintenance and disposal

General

Under normal operating conditions, the device requires only a minimum of care and maintenance. However, it is vital to observe some important points to ensure the device remains in a usable condition for many years.

Safety - maintenance

⚠ WARNING!

Danger from electric current.
This can result in serious injury and damage to property.
- ▶ Before starting maintenance or servicing work, switch off all the devices and components involved and disconnect them from the mains.
- ▶ Secure all the devices and components involved to prevent unintentional restarting.
- ▶ After opening the device, use a suitable measuring instrument to check that electrically charged components (such as capacitors) have been discharged.

⚠ CAUTION!

Danger from inadequate ground conductor connections.
This can result in injury and damage to property.
- ▶ The housing screws provide a suitable ground conductor connection for earthing the housing.
- ▶ The housing screws must not under any circumstances be replaced by other screws without a reliable ground conductor connection.

⚠ CAUTION!

Danger from hot components and parts.
This can cause burns.
- ▶ Allow hot components and parts such as welding torches to cool down before working on them.

Original spare/ wearing parts

It is impossible to guarantee that non-Fronius parts are designed and manufactured to meet the demands made on them, or that they satisfy safety requirements.
- Use only original spare and wearing parts (also applies to standard parts).
- Do not carry out any modifications, alterations, etc. to the device without the manufacturer's consent.
- Components that are not in perfect condition must be changed immediately.
- When ordering, please give the exact designation and part number as shown in the Spare Parts List, as well as the serial number of your device.

At every start-up

- Check mains plug, mains cable, welding torch, interconnecting hosepack and ground earth connection for damage
- Check that the device has an all-round clearance of 0.5 m (1 ft. 8 in.) around the device to ensure that cooling air can flow in and out freely

NOTE!

Air inlets and outlets must never be covered, not even partially.

- Check the screw connections between all system components of the welding system for tightness
- Check all the coolant connections of the welding system for tightness

Every 2 months

- If present: clean air filter

Every 6 months

NOTE!

Danger due to the effect of compressed air.
This can result in damage to property.
▶ Do not clean electronic components with compressed air at close distance.

- Open the device
- Clean out the device interior using dry compressed air at reduced pressure
- If a lot of dust has accumulated, clean the cooling air ducts

Safety inspection

The manufacturer recommends that a safety inspection of the device be performed at least once every 12 months.

The manufacturer recommends that the welding machines be calibrated at the same 12-monthly interval.

A safety inspection should be carried out by a qualified electrician:
- after any modifications or installation of additional parts;
- following repair, care and maintenance.

For safety inspections, follow the appropriate national and international standards and directives.

Further details on the safety inspection and calibration can be obtained from a Fronius branch or Fronius Service Partner.

Updating firmware

IMPORTANT! To update the firmware, you need a PC or laptop that is connected to the welding machine via an Ethernet network.

1 Get latest firmware (e.g. from the Fronius DownloadCenter)
File format: official_tpsi_x.x.x-xxxx.ffw

2 Establish Ethernet connection between PC/laptop and welding machine

3 Open the welding machine's SmartManager (see page 219)

4 Transfer the firmware to the welding machine (see page 238)

Disposal

According to the relevant EU Directive and national law, the following products must be disposed of separately and recycled:
- Waste electrical and electronic equipment
- Used batteries (portable batteries, industrial batteries)

Used equipment and batteries must be returned to the distributor or an authorised local collection system. Do not dispose of batteries in domestic waste. Protect batteries from high temperatures, direct sunlight, moisture and corrosive environments.

Arrange for the safe collection and proper disposal of damaged, leaking or decommissioned batteries by a battery recycling company or the Fronius Service Partner.

It should also be noted that batteries contain substances that, if disposed of improperly, can have a significant negative impact on the environment as well as on human health and the safety of persons, in particular due to the leakage of hazardous substances, such as heavy metals or electrolytes, which can contaminate the soil, water and air.

This ensures environmental protection and the sustainable use of natural resources.

Packaging materials
- Collect separately
- Observe locally valid regulations
- Compress the cardboard box to reduce volume

Appendix

Average consumption values

Average wire electrode consumption during MIG/MAG welding

Average wire electrode consumption at a wire speed of 5 m/min			
	Wire electrode diameter		
	1.0 mm	1.2 mm	1.6 mm
Steel wire electrode	1.8 kg/h	2.7 kg/h	4.7 kg/h
Aluminium wire electrode	0.6 kg/h	0.9 kg/h	1.6 kg/h
CrNi wire electrode	1.9 kg/h	2.8 kg/h	4.8 kg/h

Average wire electrode consumption at a wire speed of 10 m/min			
	Wire electrode diameter		
	1.0 mm	1.2 mm	1.6 mm
Steel wire electrode	3.7 kg/h	5.3 kg/h	9.5 kg/h
Aluminium wire electrode	1.3 kg/h	1.8 kg/h	3.2 kg/h
CrNi wire electrode	3.8 kg/h	5.4 kg/h	9.6 kg/h

Average shielding gas consumption during MIG/MAG welding

Wire electrode diameter	1.0 mm	1.2 mm	1.6 mm	2.0 mm	2 x 1.2 mm (TWIN)
Average consumption	10 l/min	12 l/min	16 l/min	20 l/min	24 l/min

Average shielding gas consumption during TIG welding

Gas nozzle size	4	5	6	7	8	10
Average consumption	6 l/min	8 l/min	10 l/min	12 l/min	12 l/min	15 l/min

Technical data

Explanation of the term "duty cycle"

Duty cycle (ED) is the proportion of time in a 10-minute cycle at which the device may be operated at its rated output without overheating.

> ***NOTE!***
>
> **The ED values specified on the rating plate are based on an ambient temperature of 40 °C.**
> If the ambient temperature is higher, either the ED or output must be reduced accordingly.

Example: Welding at 150 A at 60% ED
- Welding phase = 60% of 10 minutes = 6 minutes
- Cooling phase = remaining time = 4 minutes
- After the cooling phase, the cycle begins again.

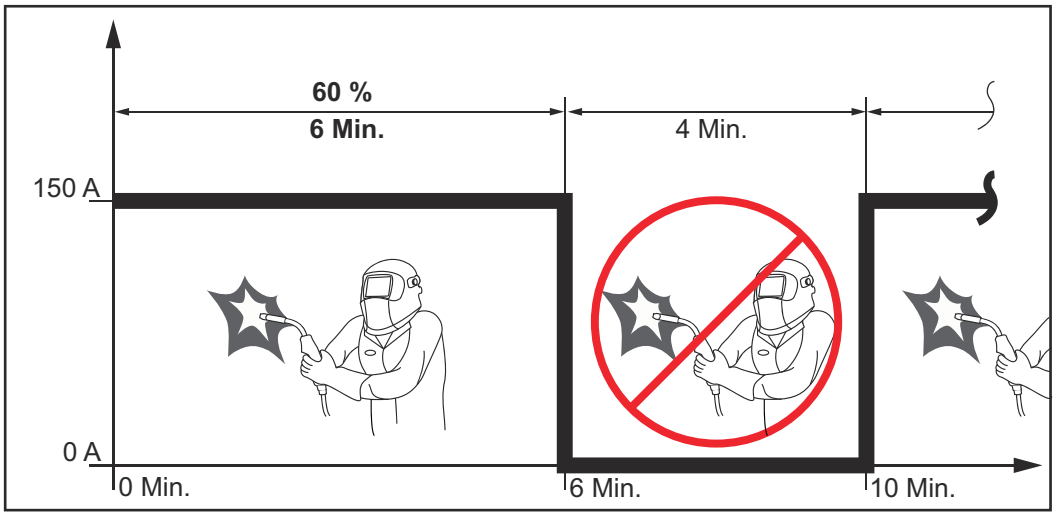

If the device is to be continuously operated without stopping:

1. Look in the technical data for a ED value of 100% for the current ambient temperature.
2. Reduce the output or amperage in line with this value so that the device can remain in use without observing a cooling phase.

Special voltages

For devices designed for special voltages, the technical data on the rating plate applies.

For all machines with a permitted mains voltage of up to 460 V: The standard mains plug allows the user to operate with a mains voltage of up to 400 V. For mains voltages up to 460 V fit a mains plug permitted for such use or install the mains supply directly.

Overview with critical raw materials, year of production of the device

Overview with critical raw materials:
An overview of which critical raw materials are contained in this device can be found at the following Internet address.
https://www.fronius.com/welding-technology/downloads
Find downloads: critical

To calculate the year of production of the device:
- Each device is provided with a serial number
- The serial number consists of 8 digits - for example 28020099
- The first two digits give the number from which the year of production of the device can be calculated
- This figure minus 11 gives the year of production
  - For example: Serial number = **28**020065, calculation of the year of production = **28** - 11 = 17, year of production = 2017

Environmental conditions

Ambient air temperature range:	
during operation	+ -10 °C to + 40 °C 14 °F to 104 °F
During transport and storage:	-20 °C to +55 °C -4 °F to 131 °F

Relative humidity of the ambient air:	
at 40 °C / 104 °F	max. 50%
at 20 °C / 68 °F	max. 90%

TPS 320i C

Mains voltage (U_1)	3 x 400 V
Max. effective primary current (I_{1eff})	12,5 A
Max. primary current (I_{1max})	19.7 A
Mains fuse protection	35 A slow-blow
Mains voltage tolerance	-15 / +15 %
Grid frequency	50 / 60 Hz
Cos phi (1)	0.99
Max. permitted grid impedance Z_{max} at PCC[1)]	96 mOhm
Recommended earth-leakage circuit breaker	Type B
Welding current range (I_2) MIG/MAG TIG Rod electrode	 3 - 320 A 3 - 320 A 10 - 320 A
Welding current at 10 min/40 °C (104 °F)	40 % / 320 A 60 % / 260 A 100 % / 220 A
Output voltage range according to standard characteristic (U_2) MIG/MAG TIG Rod electrode	 14.2 - 30.0 V 10.1 - 22.8 V 20.4 - 32.8 V
Open circuit voltage (U_0 peak/U_0 r.m.s)	71 V
Degree of protection	IP 23
Type of cooling	AF
Overvoltage category	III
Pollution degree according to IEC60664	3
EMC device class	A [2)]
Safety symbols	S, CE
Dimensions L x W x H	706 x 300 x 510 mm 27.8 x 11.8 x 20.1 in.
Weight	35.8 kg / 78.9 lb.
Max. noise emission (LWA)	69 dB (A)
Max. shielding gas pressure	7 bar / 101 psi
Coolant	Original Fronius
Wire speed	1 - 25 m/min / 40 - 980 ipm
Wire drive	4-roller drive
Wire diameter	0.8 - 1.6 mm / 0.03 - 0.06 in.
Wirespool diameter	max. 300 mm / max. 11.8 in.
Wirespool weight	max. 19.0 kg / max. 41.9 lb.

Idle state power consumption at 400 V	34.7 W
Power source efficiency at 320 A / 32,8 V	89 %

The wirefeeder for the TPS 320i C is integrated in the power source.

1) Interface to a 230/400 V and 50 Hz public grid
2) An emission class A device is not designed for use in residential areas supplied with power from a public low-voltage grid.
   The electromagnetic compatibility can be influenced by conducted or radiated radio frequencies.

TPS 320i C /nc

Mains voltage (U_1)	3 x 380 / 400 / 460 V
Max. effective primary current (I_{1eff}) 3 x 380 V 3 x 400 V 3 x 460 V	 12.9 A 12.5 A 11.0 A
Max. primary current (I_{1max}) 3 x 380 V 3 x 400 V 3 x 460 V	 20.3 A 19.7 A 17.3 A
Mains fuse protection	35 A slow-blow
Mains voltage tolerance	-10 / +15%
Grid frequency	50/60 Hz
Cos phi (1)	0.99
Max. permitted mains impedance Z_{max} at PCC[1)]	96 mOhm
Recommended residual current circuit breaker	Type B
Welding current range (I_2) MIG/MAG TIG MMA	 3-320 A 3-320 A 10-320 A
Welding current at 10 min / 40 °C (104 °F) U_1 = 380-460 V	40% / 320 A 60% / 260 A 100% / 220 A
Output voltage range according to standard characteristic (U_2) MIG/MAG TIG MMA	 14.2-30.0 V 10.1-22.8 V 20.4-32.8 V
Open circuit voltage (U_0 peak/U_0 r.m.s)	82 V
Protection class	IP 23
Type of cooling	AF
Overvoltage category	III
Pollution degree according to IEC60664	3
EMC emission class	A [2)]
Safety symbols	S, CE, CSA
Dimensions L x W x H	706 x 300 x 510 mm 27.8 x 11.8 x 20.1 in.
Weight	34.7 kg / 78.9 lb.
Max. noise emission (LWA)	69 dB (A)
Max. shielding gas pressure	7 bar / 101 psi
Coolant	Original Fronius
Wire speed	1-25 m/min / 40-980 ipm

Wire drive	4-roller drive
Wire diameter	0.8-1.6 mm / 0.03-0.06 in.
Wirespool diameter	max. 300 mm / max. 11.8 in.
Wirespool weight	max. 19.0 kg / max. 41.9 lb.
Idle state power consumption at 400 V	34.7 W
Welding machine efficiency at 320 A / 32.8 V	89%

The wirefeeder for the TPS 320i C /nc is integrated in the welding machine.

1) Interface to a 230/400 V and 50 Hz public grid
2) An emission class A device is not designed for use in residential areas supplied with power from a public low-voltage grid.
   The electromagnetic compatibility can be influenced by conducted or radiated radio frequencies.

TPS 320i C /S/nc

Mains voltage (U_1)	3 x 460 / 575 V
Max. effective primary current (I_{1eff}) 3 x 460 V 3 x 575 V	 11.6 A 10.0 A
Max. primary current (I_{1max}) 3 x 460 V 3 x 575 V	 18.3 A 15.7 A
Mains fuse protection	20 A slow-blow
Mains voltage tolerance	-10 / +10%
Grid frequency	50/60 Hz
Cos phi (1)	0.99
Recommended residual current circuit breaker	Type B
Welding current range (I_2) MIG/MAG TIG MMA	 3-320 A 3-320 A 10-320 A
Welding current at 10 min / 40 °C (104 °F) U_1 = 460-575	 40% / 320 A 60% / 260 A 100% / 220 A
Output voltage range according to standard characteristic (U_2) MIG/MAG TIG MMA	 14.2-30.0 V 10.1-22.8 V 20.4-32.8 V
Open circuit voltage (U_0 peak/U_0 r.m.s)	85 V
Protection class	IP 23
Type of cooling	AF
Overvoltage category	III
Pollution degree according to IEC60664	3
Safety symbols	S, CSA
Dimensions L x W x H	706 x 300 x 510 mm 27.8 x 11.8 x 20.1 in.
Weight	33.11 kg / 73.0 lb.
Max. noise emission (LWA)	69 dB (A)
Max. shielding gas pressure	7 bar / 101 psi
Coolant	Original Fronius
Wire speed	1-25 m/min / 40-980 ipm
Wire drive	4-roller drive
Wire diameter	0.8-1.6 mm / 0.03-0.06 in.
Wirespool diameter	max. 300 mm / max. 11.8 in.
Wirespool weight	max. 19.0 kg / max. 41.9 lb.

Idle state power consumption at 400 V	34.7 W
Welding machine efficiency at 320 A / 32.8 V	89%

The wirefeeder for the TPS 320i C is integrated in the welding machine.

TPS 320i
C /MV/nc

Mains voltage (U_1)	3 x 200 / 230 / 380 / 400 / 460 V
Max. effective primary current (I_{1eff}) 3 x 200 V 3 x 230 V 3 x 380 V 3 x 400 V 3 x 460 V	 22.2 A 19.5 A 12.9 A 12.5 A 11.0 A
Max. primary current (I_{1max}) 3 x 200 V 3 x 230 V 3 x 380 V 3 x 400 V 3 x 460 V	 35.1 A 30.7 A 20.4 A 19.8 A 17.3 A
Mains fuse protection 3 x 200 / 230 V 3 x 380 / 400 / 460 V	 35 A slow-blow 35 A slow-blow
Mains voltage tolerance	-10 / +15 %
Grid frequency	50/60 Hz
Cos phi (1)	0.99
Max. permitted mains impedance Z_{max} at PCC[1)]	96 mOhm
Recommended residual current circuit breaker	Type B
Welding current range (I_2) MIG / MAG TIG Rod electrode	 3–320 A 3–320 A 10–320 A
Welding current at 10 min / 40 °C (104 °F) U1 = 200–230 V U1 = 380–460 V	 40% / 320 A 60% / 260 A 100% / 220 A 40% / 320 A 60% / 260 A 100% / 220 A
Output voltage range according to standard characteristic (U_2) MIG / MAG TIG Rod electrode	 14.2–30.0 V 10.1–22.8 V 20.4–32.8 V
Open circuit voltage (U_0 peak / U_0 r.m.s)	82 V
Protection class	IP 23
Type of cooling	AF
Overvoltage category	III
Pollution degree according to IEC60664	3
EMC emission class	A [2)]

Safety symbols	S, CE, CSA
Dimensions L x W x H	706 x 300 x 510 mm 27.8 x 11.8 x 20.1 in.
Weight	34.7 kg / 78.9 lb.
Max. noise emission (LWA)	69 dB (A)
Max. shielding gas pressure	7 bar / 101 psi
Coolant	Original Fronius
Wire speed	1–25 m/min / 40–980 ipm
Wire drive	4-roller drive
Wire diameter	0.8–1.6 mm / 0.03–0.06 in.
Wire spool diameter	max. 300 mm / max. 11.8 in.
Wire spool weight	max. 19.0 kg / max. 41.9 lb.
Idle state power consumption at 400 V	34.7 W
Welding machine efficiency at 320 A / 32.8 V	89%

The wirefeeder for the TPS 320i C /nc MV is integrated in the welding machine.

1) Interface to a 230/400 V and 50 Hz public grid
2) An emission class A device is not designed for use in residential areas supplied with power from a public low-voltage grid.
   The electromagnetic compatibility can be influenced by conducted or radiated radio frequencies.

Radio parameters

Conformity with Directive 2014/53 / EU - Radio Equipment Directive (RED)

The following table contains the frequency ranges and maximum HF transmission power used by Fronius wireless products sold in the EU in accordance with Article 10.8 (a) and 10.8 (b) of the RED.

WiFi 2.4 GHz	
Frequency range	2412–2462 MHz
Channels used	Channel: 1–11 b, g, n20, ax 20 Channel: 12–13 blocked channel: 3–9 n40, ax40
Output	<20 dBm
Modulation	802.11b: DSSS (1Mbps DBPSK, 2Mbps DQPSK, 5.5/11Mbps CCK) 802.11g: OFDM (6/9 Mbps BPSK, 12/18 Mbps QPSK, 24/36 Mbps 16-QAM, 48/54 Mbps 64-QAM) 802.11n: OFDM (6.5 Mbps BPSK, 13/19 Mbps QPSK, 26/39 Mbps 16-QAM,52/58.5/65 Mbps 64-QAM) 802.11ax: BPSK, QPSK, 16-QAM, 64-QAM, 256-QAM, 1024-QAM (up to 143.4 Mbit/s for 1 spatial stream and up to 286.8 Mbit/s for 2 spatial streams)

Bluetooth 5.2LE 2.4 GHz	
Frequency range	2402–2482 MHz
Channels used	0–39
Output	<7 dBm
Modulation	GFSK
Data rates	125 kbps, 500 kbps, 1 Mbps, 2 Mbps

RFID	
Frequency range	13.56 MHz
Channels used	
Field strength of the transmitter at 10 m distance	-8.8 dBµA/m
Modulation	Reader/Writer, Card Emulation, Peer to Peer Modes
Protocol standards:	ISO 14443A/B, ISO15693, ISO18092, NFCIP-2,
Data rate:	848 kbps



Fronius International GmbH
Froniusstraße 1
4643 Pettenbach
Austria
contact@fronius.com
www.fronius.com

At www.fronius.com/contact you will find the contact details of all Fronius subsidiaries and Sales & Service Partners.