/ Perfect Welding / Solar Energy / Perfect Charging

FLEXARC

FRONIUS ROBOTIC WELDING CELL

SYSTEM OVERVIEW

WELDING ROBOT

/ 6-axis robot
/ Excellent path repeatability
/ High process speed
/ Load capacity: 6 - 20 kg

SAFETY TECHNOLOGY

/ Protective fence and light curtains
/ Enclosure with roll door (optional)
/ Security laser scanner

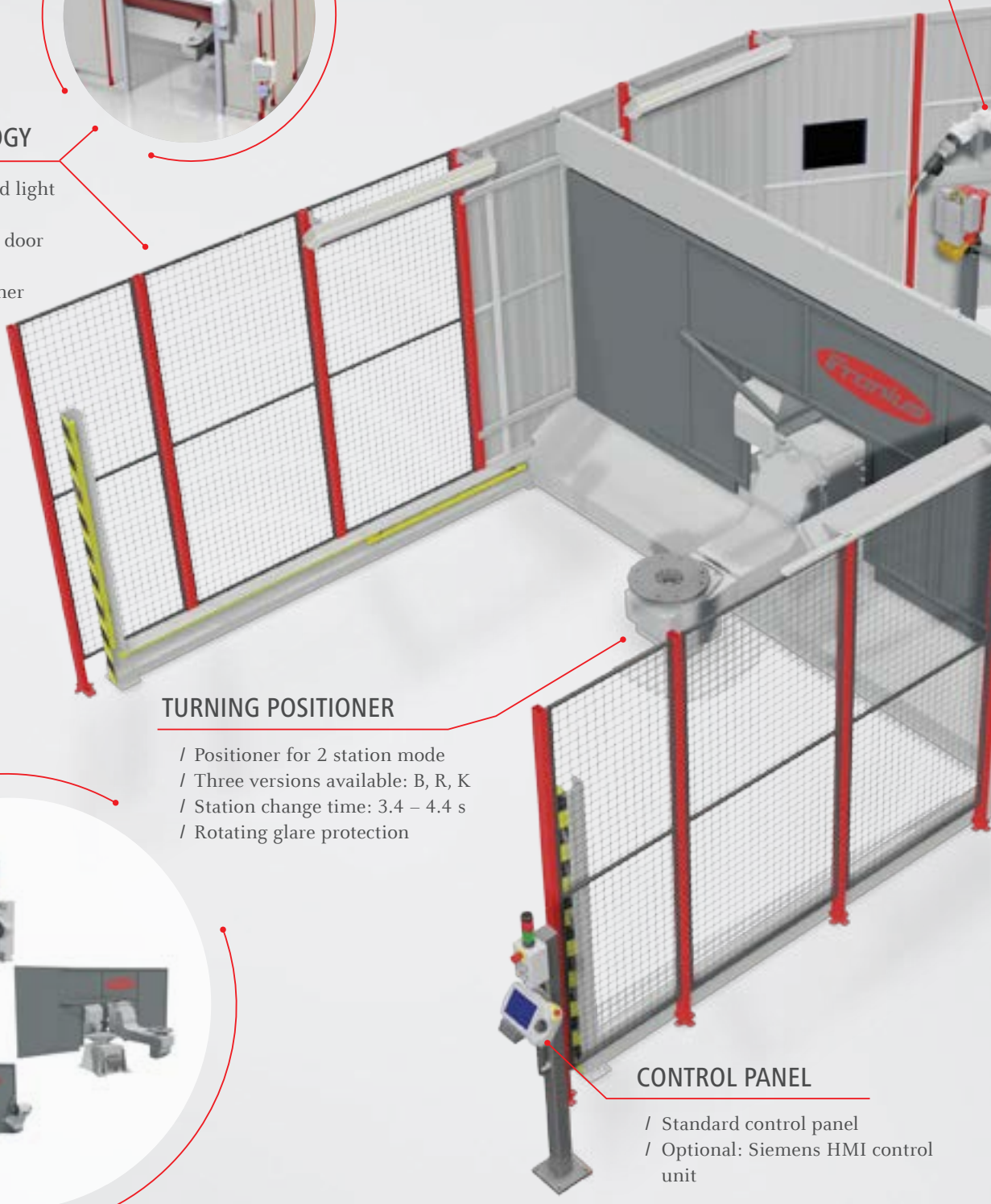

TURNING POSITIONER

/ Positioner for 2 station mode
/ Three versions available: B, R, K
/ Station change time: 3.4 – 4.4 s
/ Rotating glare protection

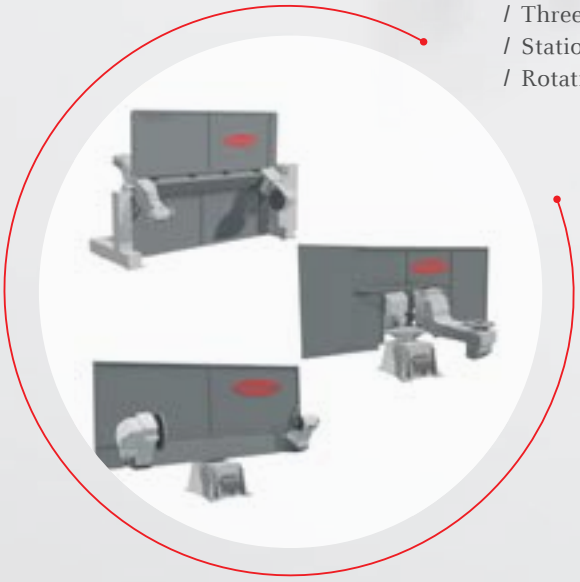

CONTROL PANEL

/ Standard control panel
/ Optional: Siemens HMI control unit

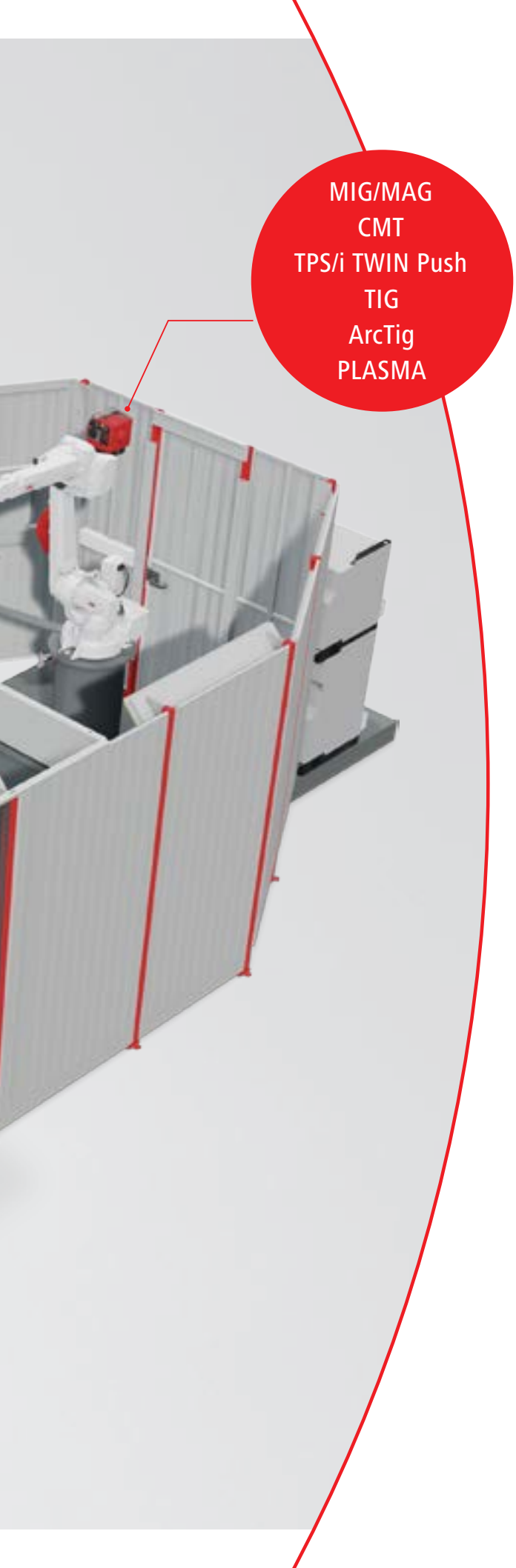

FLEXARC ROBOTIC WELDING CELLS

BETTER WELDING PERFORMANCE, COST EFFECTIVENESS, AND SAFETY

Automated welding using FlexArc robotic welding cells offers key advantages:

/ Cost and competitive advantages thanks to larger production volumes at a consistent welding quality
/ Short cycle times using 2 station mode
/ Welding results can be reproduced at any time
/ Welding data documentation (optional) for QM*
/ High movement accuracy of robot and positioner allows for constant process sequences
/ Offline programming and simulation software
/ Wide choice of Fronius welding processes
/ Modern safety technology to protect the welder
/ Quick delivery times thanks to standardization
/ Low investment costs

There are three versions to choose from: **FlexArc R / B / K.** The difference between lies in the design of the turning positioner. All versions can be installed with different robots depending on the application, whereby the robot, positioner, and control unit are installed on their own platform. This makes the entire system easier to set up and saves time.

EFFICIENT OFFLINE PROGRAMMING AND SIMULATION SOFTWARE

A user friendly simulation and offline programming software enables all robot programming and process optimization work to be carried out on a PC – and without having to cease production to do so!
The advantages here include risk minimization, shorter start-up times, quicker component changes, and increased productivity.

* Quality management

EQUIPMENT VERSIONS

POSITIONER

IRBP B / R / K are positioners with two processing stations. Whilst the robot welds the workpiece on one side, the operator can load and unload the other station. All axes can be perfectly coordinated with the robot.

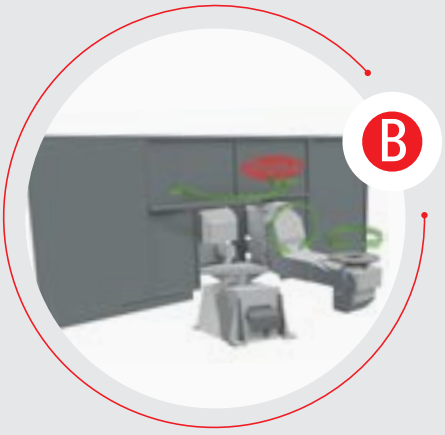

B-250 / B-500 / B-750

/ Two processing stations

/ Component manipulation via rotation and tilt axes

/ Load capacity up to 750 kg

/ Station change takes place by horizontal rotation

B-250 / B-500 / B-750	
Load capacity	250 / 500 / 750 kg
Parts rotation diameter	1180 / 1450 / 1450 mm
Min. station change time	3,4 / 3,5 / 3,5 sec
Max. station change time	3,8 / 3,7 / 3,7 sec
Repeatability	+/- 0,05 mm

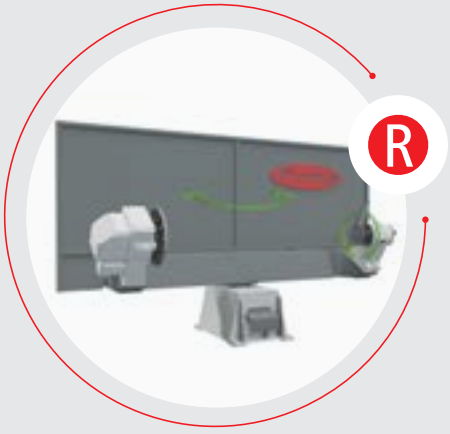

R-300 / R-600 / R-1000

/ Two processing stations

/ Component manipulation using rotation axis

/ Load capacity up to 1000 kg

/ Station change takes place by horizontal rotation

R-300 / R-600 / R-1000	
Load capacity	300 / 600 / 1000 kg
Parts rotation diameter	1000 / 1000 / 1200 mm
Min. station change time	3,4 / 3,5 / 3,5 sec
Max. station change time	3,8 / 3,7 / 3,7 sec
Repeatability	+/- 0,05 mm

K-300 / K600 / K1000

/ Two processing stations

/ Component manipulation using rotation axis

/ Load capacity up to 1000 kg

/ Station change takes place by vertical rotation

K-300 / K600 / K1000	
Load capacity	300 / 600 / 1000 kg
Parts rotation diameter	1000 / 1200, 1400 / 1200, 1400 mm
Min. station change time	3,1 - 3,7 sec
Max. station change time	3,8 / 3,7 / 3,7 sec
Repeatability	+/- 0,05 mm

6-AXIS ROBOT

Depending on the application, there are different 6-axis robots available with different load capacities and ranges.

IRB 1600-6 / 1660ID-6

/ High process speed / short cycle times
/ High position and path repeatability
/ IRB 1660**ID** with hollow shaft for integrated hosepack guidance.

IRB 1600-6 / 1660ID-6	
Load capacity	6 / 6 kg
Range	1450 / 1550 mm
Position repeatability	0,02 / 0,02 mm
Path repeatability	0,19 / 0,05 mm
Degree of protection	IP54 (optional IP67, FoundryPlus 2)

IRB 2600-12 / 2600-20 / 2600ID-8

/ High process speed / short cycle times
/ High position and path repeatability
/ IRB 2600**ID** with hollow shaft for integrated hosepack guidance.

IRB 2600-12 / 2600-20 / 2600ID-8	
Load capacity	12 / 20 / 8 kg
Range	1853 / 1653 / 2000 mm
Position repeatability	0,04 / 0,04 / 0,02 mm
Path repeatability	0,16 / 0,13 / 0,27 mm
Degree of protection	IP67 (optional FoundryPlus 2)

IRB 4600-20

/ High process speed / short cycle times
/ High position and path repeatability
/ Very large operating range (up to 2.5 m)

IRB 4600-20	
Load capacity	20 kg
Range	2513 mm
Position repeatability	0,05 mm
Path repeatability	0,13 mm
Degree of protection	IP67 (optional FoundryPlus 2)

FLEXARC B
TECHNICAL DATA

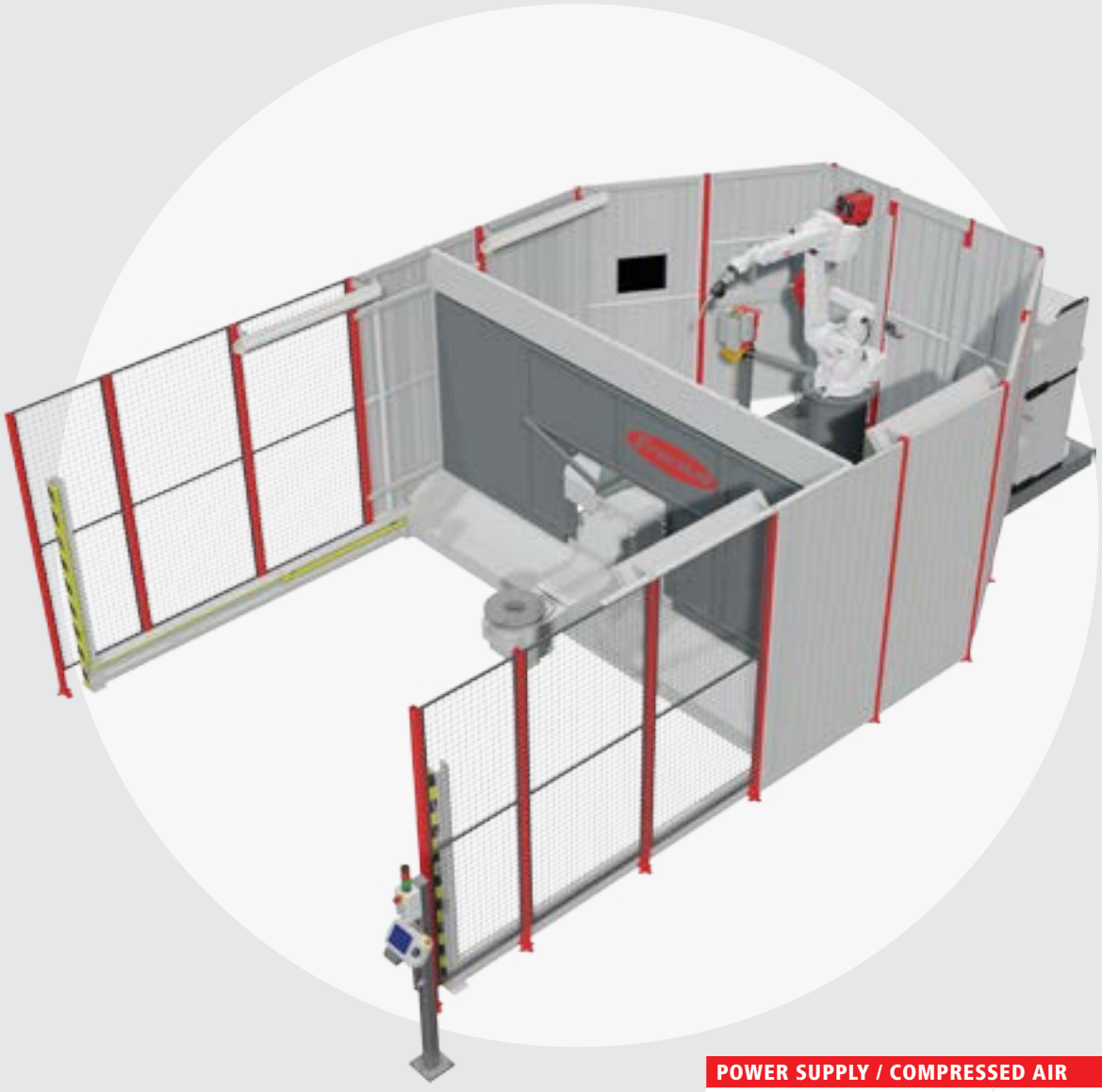

POWER SUPPLY / COMPRESSED AIR	
Mains voltage	3 x 400 V
Mains fuse	3 x 63 A
Power consumption	22 kVA
Compressed air	0,6 mPA

	POSITIONER				ROBOT BASE	WELDING CELL					
	De (mm)	Dp (mm)	LH (mm)	Payload (kg)	Hp (mm)	W / W1 (mm)	L / L1 (mm)	H (mm)	Hmax (mm)	m / m1 (kg)	Number of robots
B-250	3040	1180	925	250	1000	3320 / 3320	6900 / 5940	2400	3280	4000 / 4100	1
B-500	4132	1450	925	500	1000	4350 / 4415	8180 / 6850	2400	3280	5000 / 5100	1
B-750	4132	1450	925	750	1000	4350 / 4415	8180 / 6850	2400	3280	5000 / 5100	1, 2

FLEXARC B WITH SAFETY FENCE & LIGHT CURTAIN

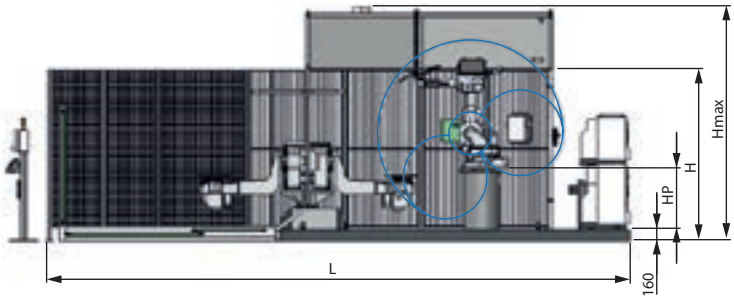

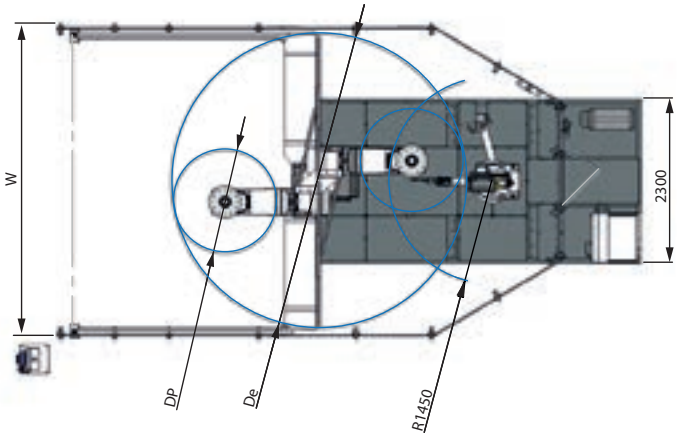

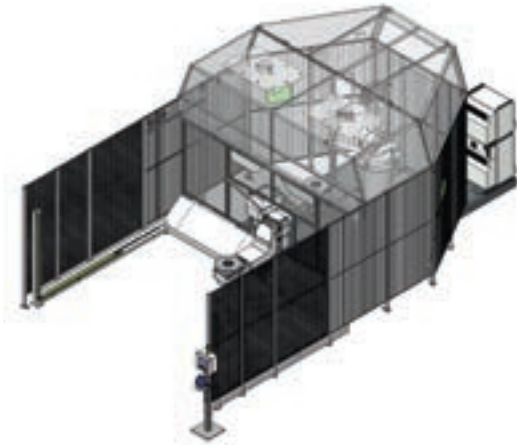

FLEXARC B WITH ROLL DOOR

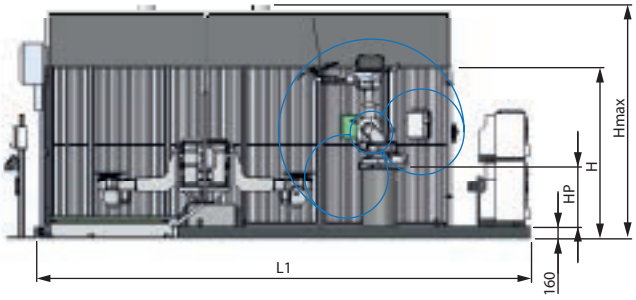

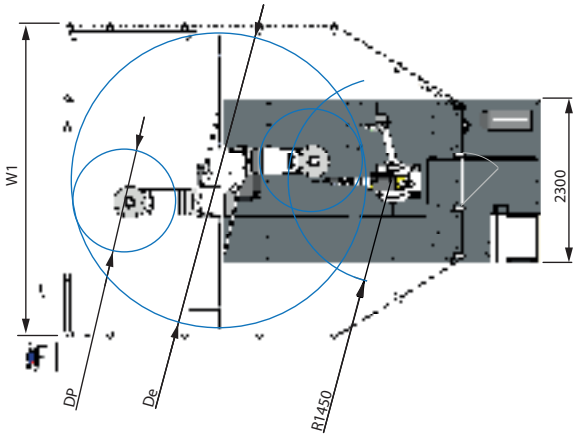

FLEXARC R
TECHNICAL DATA

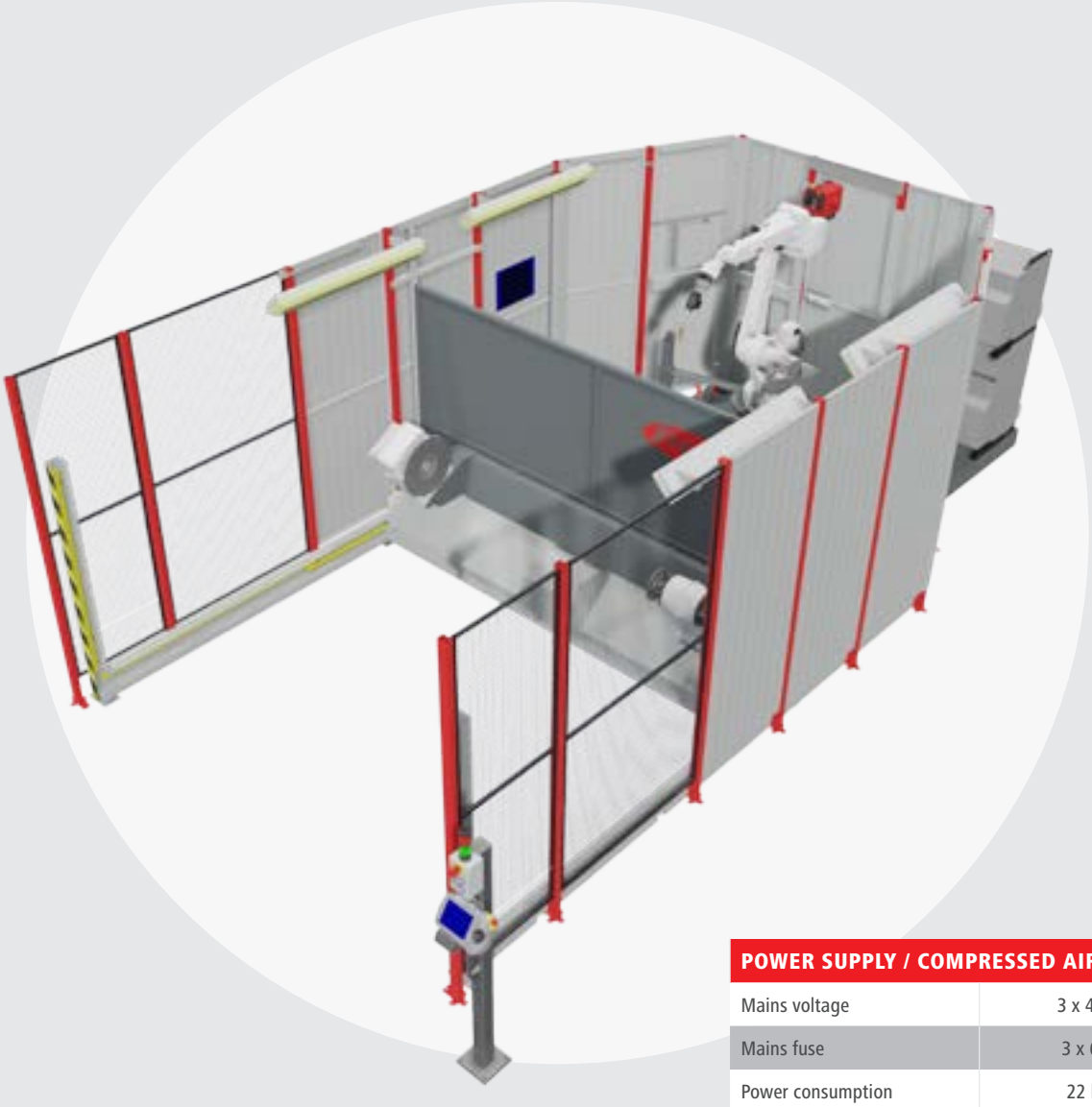

POWER SUPPLY / COMPRESSED AIR	
Mains voltage	3 x 400 V
Mains fuse	3 x 63 A
Power consumption	22 kVA
Compressed air	0,6 mPA

	POSITIONER					ROBOT BASE	WELDING CELL					
	De (mm)	Dp (mm)	LH (mm)	LP (mm)	Payload (kg)	Hp (mm)	W (mm)	L / L1 (mm)	H (mm)	Hmax (mm)	m / m1 (kg)	Number of robots
R-300	2380	1000	975	1250	300	800	2820	6600 / 5580	2400	3080	4000 / 4100	1, 2
	2620	1000	975	1600	300	800	2820	6600 / 5580	2400	3080	4000 / 4100	1, 2
R-600 R-1000	3000	1000	975	1600	600 / 1000	800	3520	7125 / 5845	2400	3080	4500 / 4700	1, 2
	3350	1000	795	2000	600 / 1000	800	3520	7125 / 5945	2400	3080	4600 / 4800	1, 2
	3000	1200	1060	1600	600 / 1000	800	3520	7125 / 5845	2400	3080	4500 / 4700	1, 2
	3350	1200	1060	2000	600 / 1000	800	3520	7125 / 5945	2400	3080	4600 / 4800	1, 2

FLEXARC R WITH SAFETY FENCE & LIGHT CURTAIN

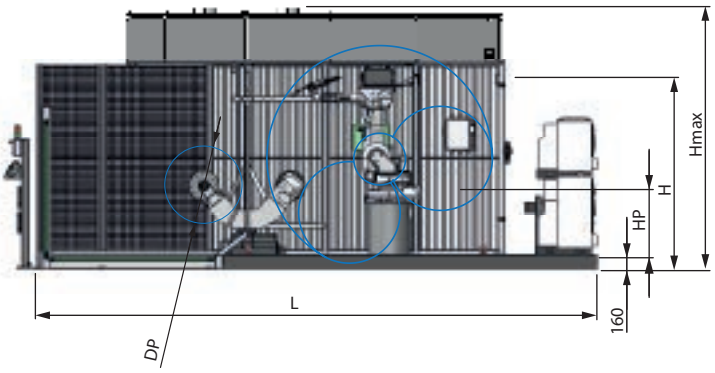

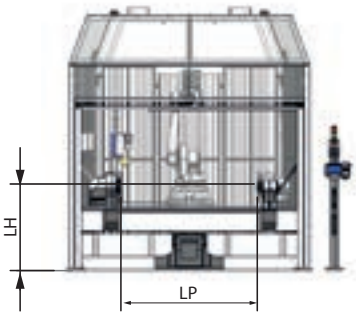

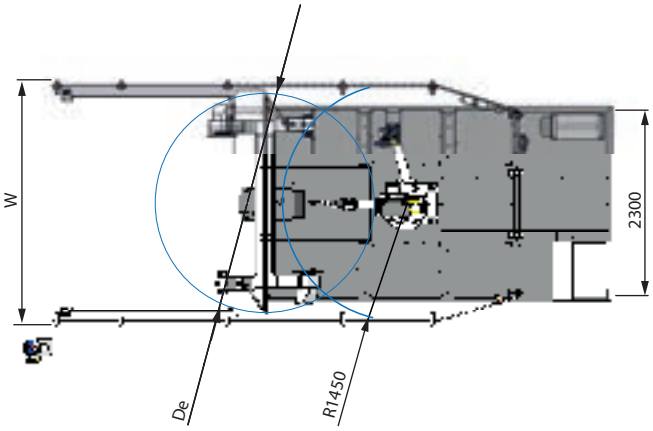

FLEXARC R WITH ROLL DOOR

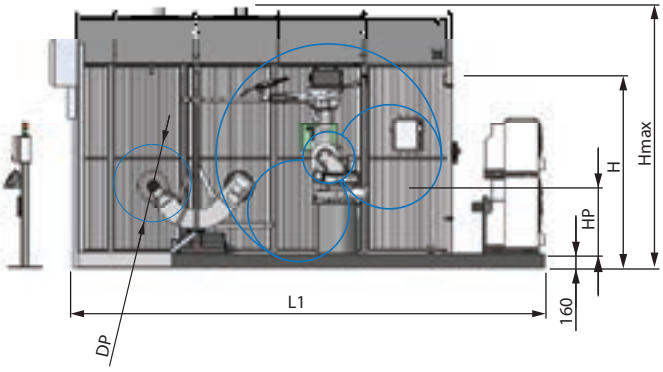

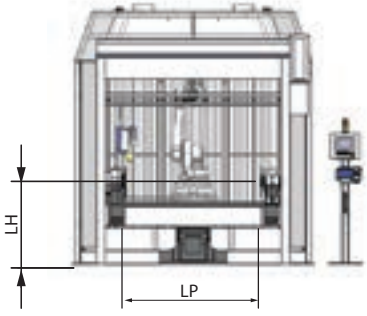

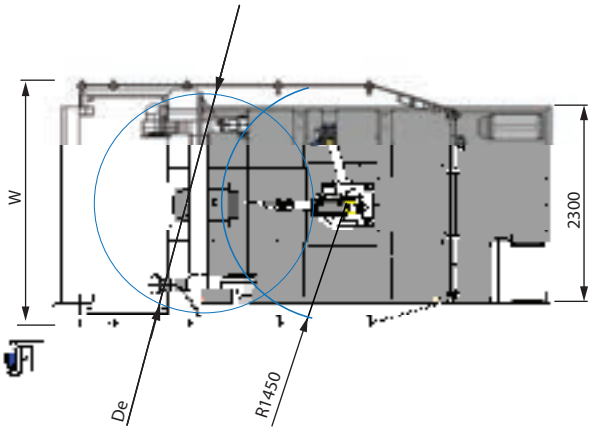

FLEXARC K
TECHNICAL DATA

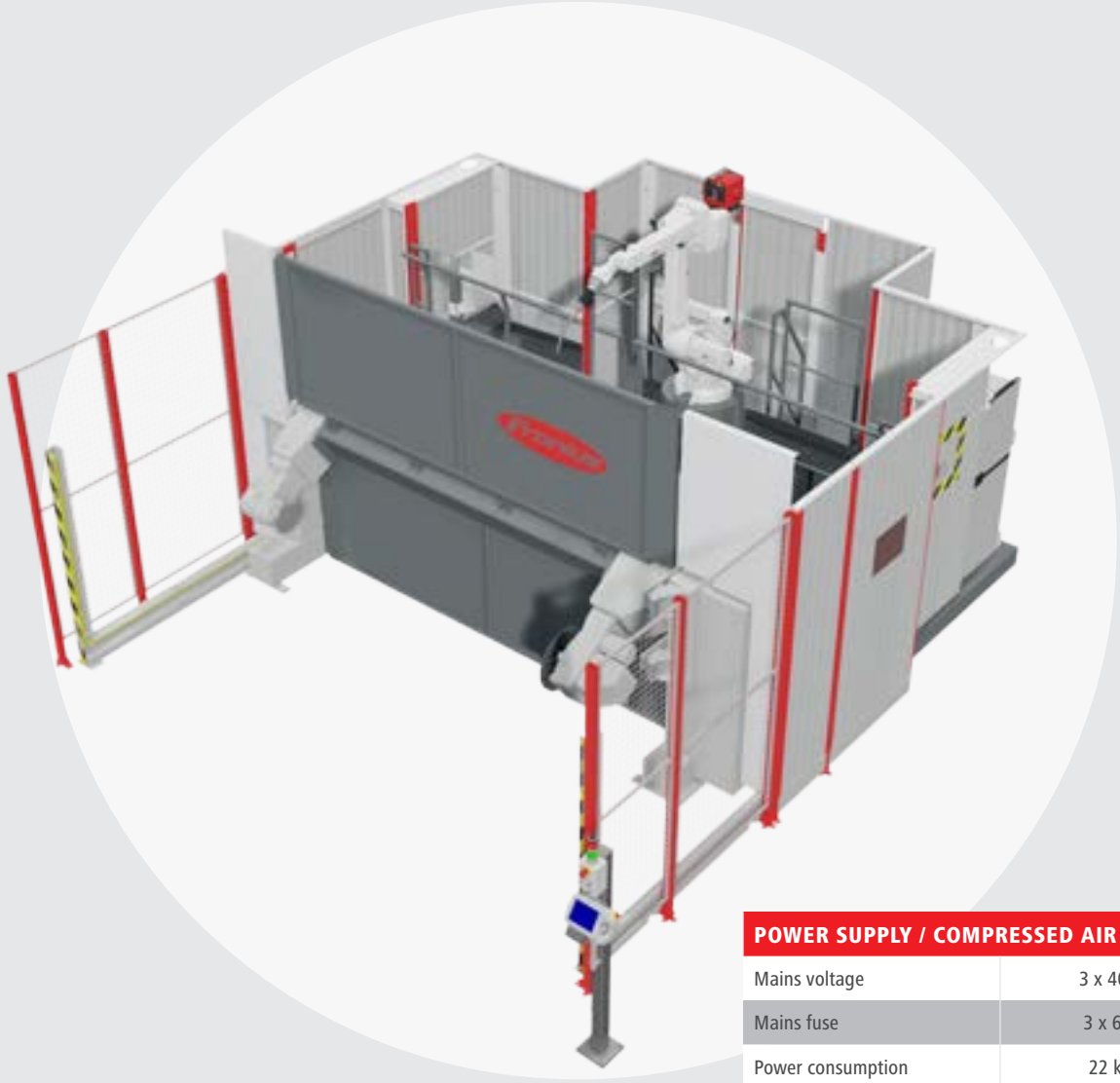

POWER SUPPLY / COMPRESSED AIR	
Mains voltage	3 x 400 V
Mains fuse	3 x 63 A
Power consumption	22 kVA
Compressed air	0,6 mPA

	POSITIONER					ROBOT BASE	WELDING CELL							
	De (mm)	Dp (mm)	LH (mm)	LP (mm)	Payload (kg)	Hp (mm)	W (mm)	L (mm)	L1 (mm)	H (mm)	Hmax (mm)	m (kg)	m1 (kg)	N° of robots
K-300 D1000	2240	1000	950	1600, 2000, 2500, 3150, 3500, 4000	300	1100	4443, 4443, 4443, 4904, 5323, 5920	6158, 6158, 6158, 6191, 6164, 6264	4770, 4770, 4770, 4802, 4776, 4776	2380	3720	4300, 4350, 4400, 4475, 4550, 4600	4250, 4300, 4450, 4525, 4600, 4650	1, 2
K-300 D1200	2640	1200	950		300	1500	4443, 4443, 4443, 4904, 5323, 5920	6152, 6158, 6158, 6191, 6264, 6264	4770, 4770, 4770, 4802, 4776, 4776	2380	3720	4400, 4450, 4500, 4575, 4650, 4700	4350, 4400, 4550, 4625, 4700, 4750	1, 2
K-600 / K-1000 D1200	2720	1200	950		600, 1000	1500	4443, 4443, 4904, 5323, 5723, 6120	6458, 6458, 6491, 6564, 6564, 6564	5070, 5070, 5101, 5076, 5076, 5076	2380	3720	5100, 5200, 5300, 5400, 5600, 5700	5150, 5250, 5350, 5450, 5650, 5750	1, 2
K-600 / K-1000 D1400	3120	1400	950		600, 1000	1800	4443, 4443, 4904, 5323, 5723, 6120	6758, 6758, 6791, 6864, 6864, 6864	5370, 5370, 5401, 5376, 5376, 5376	3100	4020	5600, 5700, 5800, 5900, 6000, 6100	5650, 5750, 5850, 5950, 6050, 6150	1, 2

FLEXARC K WITH SAFETY FENCE & LIGHT CURTAIN

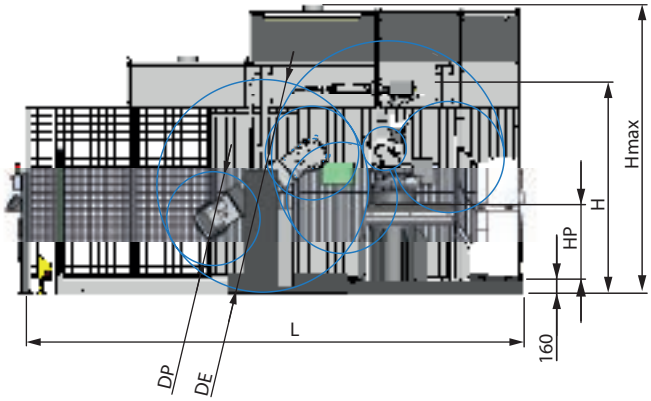

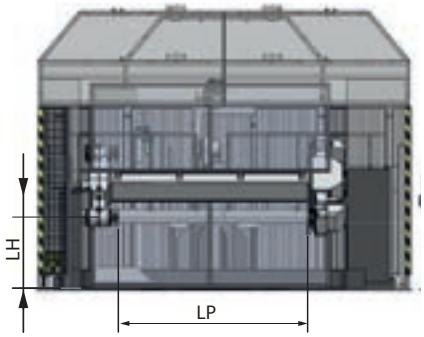

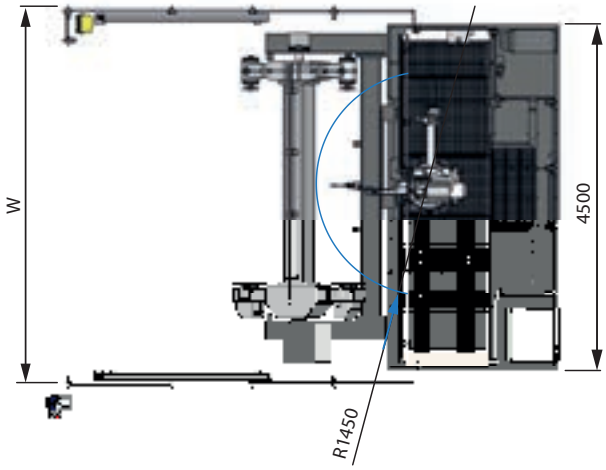

FLEXARC K WITH ROLL DOOR

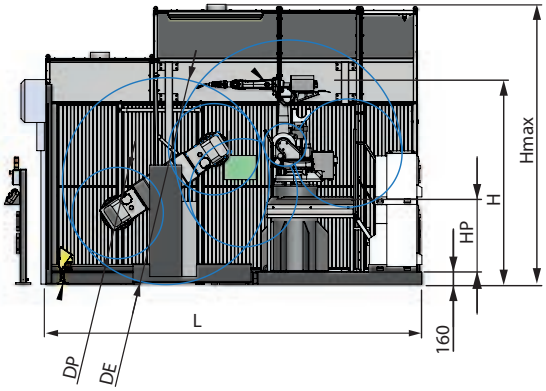

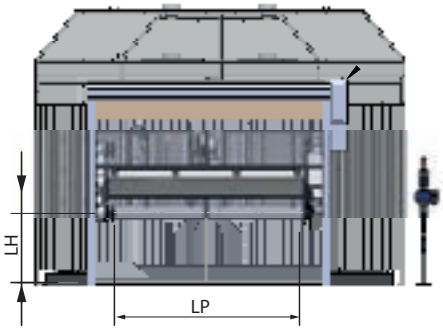

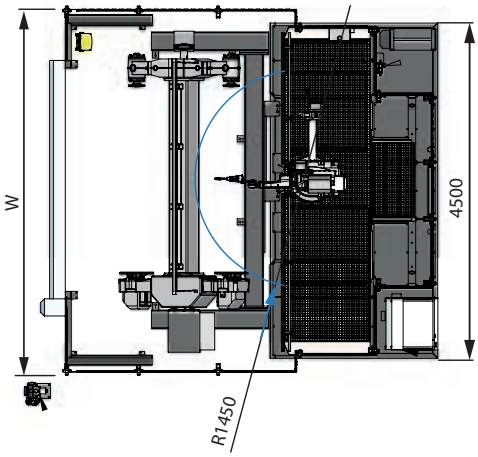

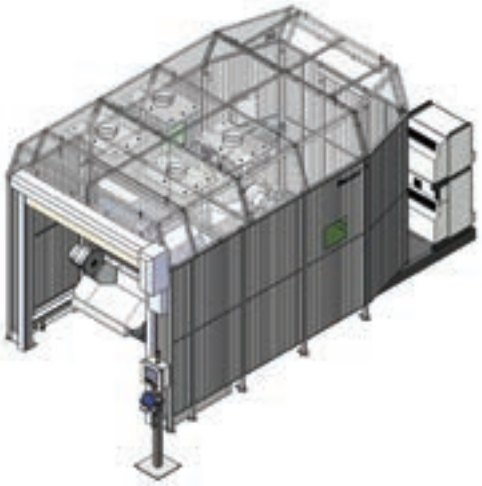

ACCESSORIES

SAFETY TECHNOLOGY

- Protective enclosure with rolling shutter gate
- Horizontal light curtains
- Security scanner
- Lighting for welding and loading station

CONTROLS

- Siemens HMI

SMOKE EXTRACTION HOOD

- Extraction hood above welding station
- Extraction hood above welding station and loading station

TORCH CLEANING DEVICE / CALIBRATION

- Torch cleaning and wire cutting station
- BullsEye torch calibration (TCP - Tool Center Point)

/ Perfect Welding / Solar Energy / Perfect Charging

THREE BUSINESS UNITS, ONE GOAL: TO SET THE STANDARD THROUGH TECHNOLOGICAL ADVANCEMENT.

What began in 1945 as a one-man operation now sets technological standards in the fields of welding technology, photovoltaics and battery charging. Today, the company has around 5,440 employees worldwide and 1,264 patents for product development show the innovative spirit within the company. Sustainable development means for us to implement environmentally relevant and social aspects equally with economic factors. Our goal has remained constant throughout: to be the innovation leader.

Further information about all Fronius products and our global sales partners and representatives can be found at **www.fronius.com**

Text and images correspond to the current state of technology at the time of printing. Subject to modifications.
All information is without guarantee in spite of careful editing - liability excluded. Copyright © 2011 Fronius™. All rights reserved.

EN v02 2020 aw21

Fronius Canada Ltd.
2875 Argentia Road, Units 4,5 & 6
Mississauga, ON L5N 8G6
Canada
Telephone +1 905 288-2100
Fax +1 905 288-2101
sales.canada@fronius.com
www.fronius.ca

Fronius USA LLC
6797 Fronius Drive
Portage, IN 46368
USA
Telephone +1 877 FRONIUS
sales.usa@fronius.com
www.fronius-usa.com

Fronius UK Limited
Maidstone Road, Kingston
Milton Keynes, MK10 0BD
United Kingdom
Telephone +44 1908 512 300
Fax +44 1908 512 329
info-uk@fronius.com
www.fronius.co.uk

Fronius International GmbH
Froniusplatz 1
4600 Wels
Austria
Telephone +43 7242 241-0
Fax +43 7242 241-953940
sales@fronius.com
www.fronius.com