Operating Instructions

Fronius Backup Switch 1PN/3PN-63A

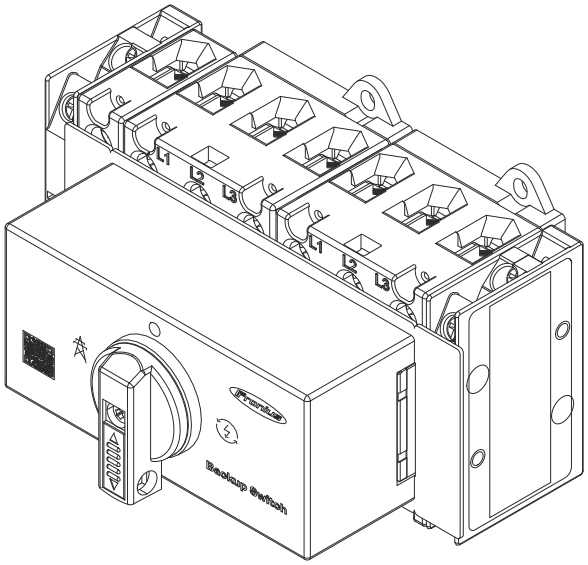

EN | Operating Instructions

42,0426,0537,EA 009-14072026

Table of contents

General information **5**

Safety information 7
Explanation of warnings and safety instructions 7
Safety instructions and important information 7
Environmental conditions 8
General 9
Information on the device 9
How information is presented in the document 10
Target group 10
Data security 10
Copyright 11
Fronius Backup Switch 12
Intended use 12
Foreseeable misuse 12
Scope of supply 12
Compatible devices 12
Explanation of symbols 13
Positioning 13
Operating controls and connections 15
Switch positions of the Backup Switch 15
Connection area 15

Installation and Startup **17**

Requirements for connecting the Backup Switch 19
Protective circuit 19
Various cable types 19
Permissible cables for Backup Switch 1PN/3PN-63A 19
Permitted connection screws 20
Preparing for the installation 21
Safety 21
General disconnection of the power supply 22
Installation 22
Disassembly of the switch and the housing cover 23
Stripping lengths 23
2-pin installation 24
Connecting the Backup Switch 2-pin to the public grid 24
Connecting 2-pin loads in the backup power circuit to the Backup Switch 25
4-pin installation 26
Connecting the Backup Switch 4-pin to the public grid 26
Connecting 4-pin loads in the backup power circuit to the Backup Switch 27
Connecting the data communication cables 28
Description of the data communication 28
Notes on data communication 28
Data communication – Modbus RTU option 28
Data communication – Modbus TCP/IP | MQTT option 29
Mounting the protective cover 30
Mounting the protective covers 30
Mounting housing cover and switch 31
Mounting the housing cover and the switch 31
Commissioning 32
Putting the PV system into operation 32
General 32
Backup power - Configuring Full Backup 32
Testing backup power mode 33
Manual system start in backup power mode 33

Technical data **35**

Technical data 37
Technical data 37

Service, warranty terms and conditions, and disposal **39**

Service, warranty terms and conditions, and disposal 41
Maintenance 41
Warranty 41
Disposal 41

Circuit Diagrams **43**

Manual switch to backup power 2-pin separation, e.g., Germany 44
Manual switch to backup power 3-pin separation with grid and system protection 45
Manual switch to backup power 4-pin separation, e.g., Germany 46

General information

Safety information

Explanation of warnings and safety instructions

Warnings are intended to warn people of possible injuries and to avoid personal injury and damage to the product. They relate to individual actions with and on the product.

⚠ DANGER

Indicates an immediately dangerous situation.
Serious injury or death will result if the danger is not avoided.
▶ Action step to escape the situation.

⚠ WARNING

Indicates a potentially dangerous situation.
Serious injury or death may result if the danger is not avoided.
▶ Action step to escape the situation.

⚠ CAUTION

Indicates a potentially dangerous situation.
Minor or moderate injury may result if the danger is not avoided.
▶ Action step to escape the situation.

NOTE

Indicates a situation that may result in property damage.
If the situation is not avoided, impaired work results, material damage to the product or other property are the possible consequences.
▶ Action step to avoid the situation.

Safety instructions are designed to ensure safe product use. They are preventive and help to inform users about the fundamental risks involved when dealing with the product. They do not refer specifically to individual actions with and on the product.

Safety instructions and important information

The device has been manufactured in line with the state of the art and according to recognized safety standards.

⚠ WARNING

Incorrect operation or misuse
Serious to fatal injuries to the operator or third parties as well as damage to the device and other property of the operator may result.
▶ All persons involved in the commissioning, maintenance, and servicing of the device must be appropriately qualified and have knowledge of working with electrical installations.
▶ Read these operating instructions in full and follow them carefully and precisely.
▶ The operating instructions must always be kept to hand wherever the device is being used.

IMPORTANT!
In addition to the operating instructions, observe the following general and local rules:
- Accident prevention
- Fire protection
- Environmental protection

IMPORTANT!
Labels, warning notices, and safety symbols are located on the device. A description can be found in these operating instructions.

IMPORTANT!
All safety and danger notices on the device:
- Must be kept in a legible state
- Must not be damaged/marked
- Must not be removed
- Must not be covered, have anything stuck on them, or painted over

⚠ WARNING

Tampered-with and non-functioning protection devices
Serious to fatal injuries as well as damage to the device and other property of the operator may result.
- ▶ Never bypass or disable protection devices.
- ▶ Any protection devices that are not fully functional must be repaired by an authorized specialist before the device is switched on.

⚠ WARNING

Loose, damaged, or under-dimensioned cables
An electric shock can be fatal.
- ▶ Use undamaged, insulated, and adequately dimensioned cables.
- ▶ Fasten the cables according to the specifications in the operating instructions.
- ▶ Loose, damaged, or under-dimensioned cables must be repaired or replaced immediately by an authorized specialist.

NOTE

Installations or modifications to the device
The device may be damaged
- ▶ Do not carry out any alterations, installations, or modifications to the device without first obtaining the manufacturer's permission.
- ▶ Damaged components must be replaced.
- ▶ Only use original spare parts.

Environmental conditions

Operation or storage of the machine outside the stipulated area will be deemed as not in accordance with the intended purpose.

For exact information on permitted environmental conditions, please refer to the technical data.

General

Information on the device

Technical data and markings are present on the Fronius Backup Switch. They must not be removed or painted over.

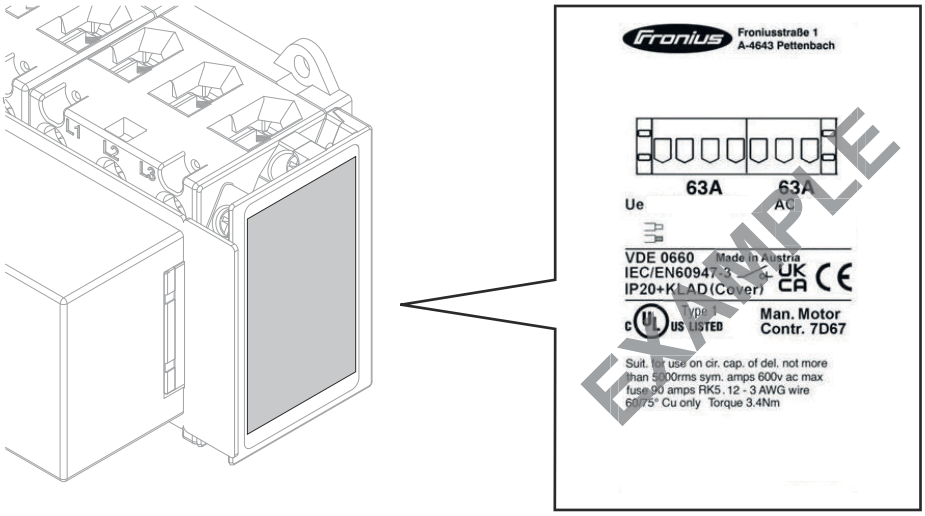

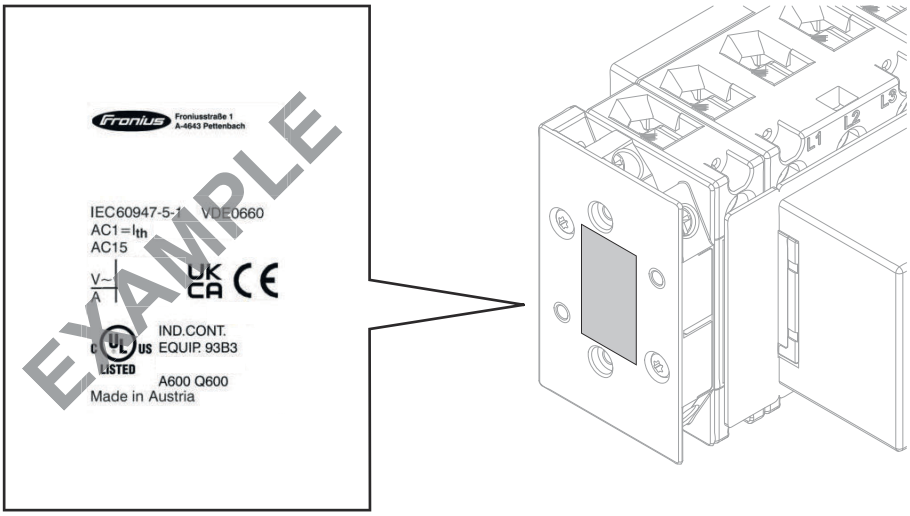

Markings

CE label – confirms compliance with applicable EU directives and regulations.

UKCA marking – confirms compliance with applicable UK directives and regulations.

C UL US LISTED marking – confirms compliance with applicable standards for Canada and the USA.

IMPORTANT!
NO power categories of the US versions of the Fronius product series "Primo GEN24 X.X **208-240** (Plus) (SC)" are compatible with the Fronius Backup Switch.

How information is presented in the document

The conventions regarding how information is presented in the document, which are set out below, have been defined in order to increase the readability and comprehensibility of the document.

Application notes

IMPORTANT! Indicates application notes and other useful information. It does not indicate a harmful or dangerous situation.

Software

Software functions and elements of a graphical user interface (e.g., buttons, menu items) are highlighted in the text with this **mark up**.

Example: Click **Save**.

Instructions for action

1 Action steps are displayed with consecutive numbering.

✓ *This symbol indicates the result of the action step or the entire instruction.*

Target group

This document provides detailed information and instructions to ensure that people can use the machine safely and efficiently.

The information is intended for the following groups of people:

- **Technical specialists:** People with appropriate qualifications and fundamental knowledge of electronics and mechanics. The activities of a technical specialist include installation, operation, maintenance, and service work.
- **User:** People that use the machine in daily operation and want to understand its basic functions.

Regardless of any qualifications, only perform the activities listed in this document.

The definition of professional qualifications and their applicability are subject to national law.

Data security

With regard to data security, the user is responsible for:

- Backing up any changes made to the factory settings
- Saving and storing personal settings

NOTE

Data security for network and Internet connection
Unsecured networks and a lack of safeguards can result in data loss and unauthorized access. Observe the following points for safe operation:

- Operate inverters and system components on a private, secure network. A WiFi network is considered secure if security standard WPA 2 is satisfied as a minimum.
- Keep the network devices (e.g., WiFi routers) up to date with the latest technology.
- Keep the software and/or firmware updated.
- Use a wired network to ensure a stable data connection.
- For security reasons, do not make inverters and system components accessible from the Internet via port forwarding or Port Address Translation (PAT).
- Use the solutions provided by Fronius for monitoring and remote configuration.
- The optional communication protocol Modbus TCP/IP[1)] is an unsecured interface. Only use Modbus TCP/IP if no other secured data communication protocol (MQTT[2)]) is possible (e.g., compatibility with older Smart Meters).

[1)] TCP/IP - Transmission Control Protocol/Internet Protocol
[2)] MQTT - Message Queuing Telemetry Protocol

Copyright

Fronius International GmbH retains the copyrights of these operating instructions.

Text, illustrations, and other media correspond to the technical state of the art at the time of publication. Fronius reserves the right to make changes. If you have any suggestions for improvement or have found a mistake in this document, we would be most grateful for your comments.

Fronius Backup Switch

Intended use

The Fronius Backup Switch is a piece of stationary equipment that was developed for use in public power grids with TN/TT systems. In the event of a grid failure, all connected loads and producers can be manually disconnected from the public grid in accordance with the specifications of the grid operator. The Fronius Backup Switch enables manual switching to the backup power supply. As soon as the public grid is stable again, the Fronius Backup Switch can be used to switch manually back to the power supply from the public grid. The Fronius Backup Switch can only be used in systems containing a Fronius inverter and battery storage system.

Foreseeable misuse

The Fronius Backup Switch is not suitable for the backup power supply of life-sustaining medical devices.

Scope of supply

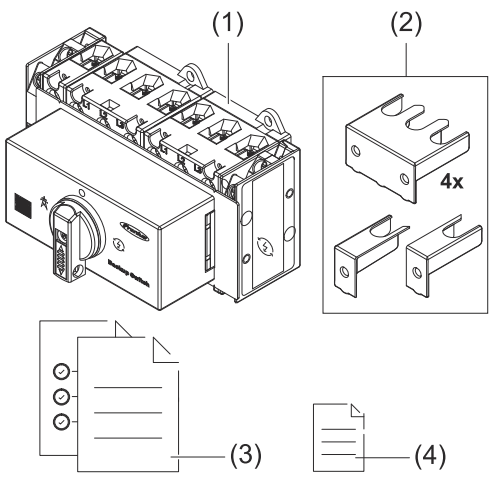

(1) 1 pc Fronius Backup Switch
(2) 4 pcs large protective cover incl. 8 pcs screws B2.2x6.5 mm (not shown)
2 pcs small protective cover incl. 2 pcs screws B2.2x6.5 mm (not shown)
(3) 1 pc Quick Start Guide
(4) 1 pc "backup power supply" sticker

Compatible devices

Compatible inverters
- Fronius Primo GEN24 Plus
- Fronius Symo GEN24 Plus
- Fronius Verto Plus

IMPORTANT!
NO power categories of the US versions of the Fronius product series "Primo GEN24 X.X **208-240** (Plus) (SC)" are compatible with the Fronius Backup Switch.

Compatible Smart Meters
- Fronius Smart Meter IP
- Fronius Smart Meter 50kA-3
- Fronius Smart Meter 63A-1
- Fronius Smart Meter 63A-3
- Fronius Smart Meter TS 5kA-3
- Fronius Smart Meter TS 65A-3
- Fronius Smart Meter TS 100A-1

Details on how to connect a Fronius Smart Meter can be found in the respective operating instructions.
To download the Smart Meter operating instructions, either click on the link Smart Meter operating instructions or visit the page **fronius.com/en/solar-energy/installers-partners/downloads** on an end device and enter the search term "Smart Meter".

Explanation of symbols

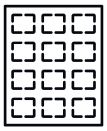	**PV module** generates direct current
HYBRID	**Fronius Hybrid inverter** Converts direct current into alternating current and charges the battery. - Fronius Symo / Primo GEN24 Plus - Fronius Verto Plus
	Fronius Backup Switch In the event of a power failure or grid malfunction, this enables all connected loads and producers to be disconnected from the public grid manually and safely in accordance with the specifications of the grid operator. Once grid stability has been restored, manual reconnection to the public grid is possible.
	Inverter in the system e.g. Fronius Primo, Fronius Symo, etc.
	Primary meter (Fronius Smart Meter) records the load curve of the system and makes the measured data available for energy profiling in Fronius Solar.web. The primary meter also regulates the dynamic feed-in control.
	Utility meter measures the metering data relevant for the billing of electricity quantities (primarily the kilowatt hours of grid purchases and grid power feed). On the basis of the data relevant for billing, the electricity retailer invoices a grid purchase and the purchaser of the surplus pays for the grid power feed.
	Grid supplies the loads in the system if insufficient power is being generated by the PV modules or supplied by the battery.
	Battery is coupled to the inverter on the direct current side, and stores electrical energy.
	Loads in the system e.g. washing machine, lights, television, etc.

Positioning

The Fronius Backup Switch must be installed at the following position in the system.

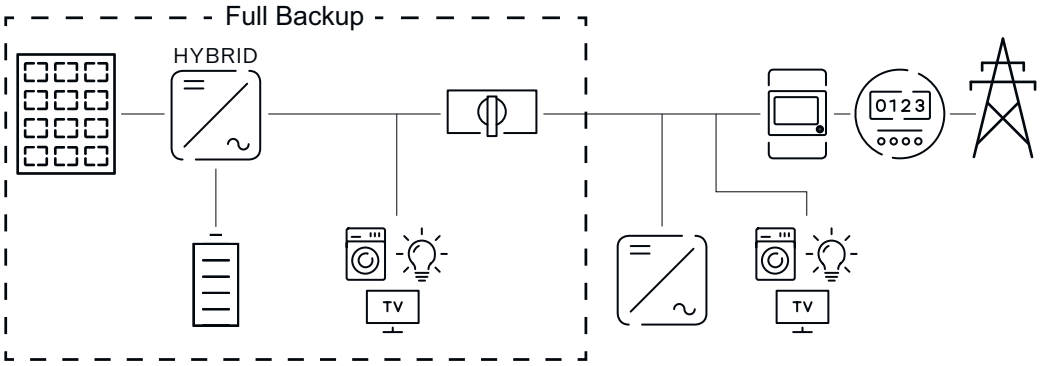
Full Backup
HYBRID
TV
TV
0123

Operating controls and connections

Switch positions of the Backup Switch

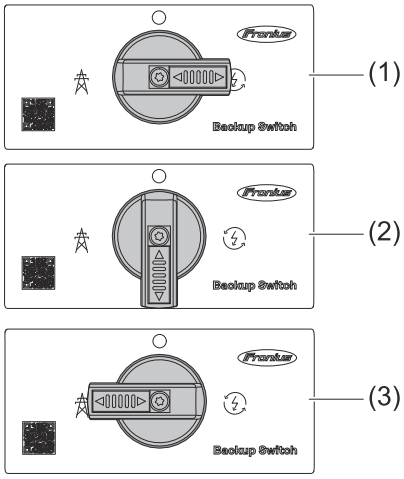

The backup switch has three switch positions:

(1) **Grid operation**
The power is supplied by the public grid.

(2) **0-position** (de-energized)
The power supply is safely disconnected from the public grid or from the backup power supply.

(3) **Backup power mode**
The power is supplied as backup power via the inverter or the battery.

IMPORTANT!
In the switch position (2) the Backup Switch can be secured to prevent it from being switched on/off using a standard padlock. The national guidelines must be complied with in this respect.

Connection area

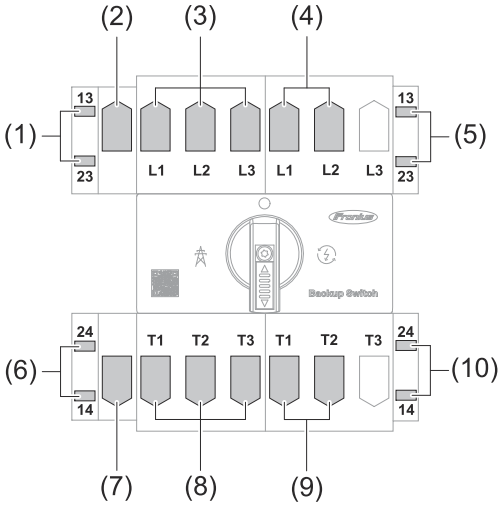

(1) Auxiliary contact switch terminals: Data communication
(2) Load disconnector 63 A terminals: Neutral conductor
(3) Load disconnector 63 A terminals: Grid
(4) Load disconnector 63 A terminals: Neutral conductor ground connection
(5) Auxiliary contact switch terminals: Data communication
(6) Auxiliary contact switch terminals: Data communication
(7) Load disconnector 63 A terminals: Neutral conductor
(8) Load disconnector 63 A terminals: Load
(9) Load disconnector 63 A terminals: Neutral conductor ground connection
(10) Auxiliary contact switch terminals: Data communication

For information about installing data communication, see chapter Connecting the data communication cables on page 28.

Installation and Startup

Requirements for connecting the Backup Switch

Protective circuit

For safe operation of the Fronius Backup Switch, the following components must be installed in the switch cabinet:

- Upstream overcurrent protection according to the information in the chapter Technical data on page 37.
- A surge protection device (SPD) as specified in chapter Technical data on page 37.

Various cable types

Solid	Fine-stranded	Fine-stranded with ferrule and collar	Fine-stranded with ferrule without collar
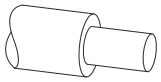	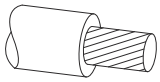	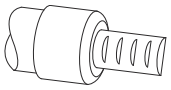	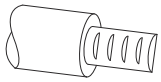

Permissible cables for Backup Switch 1PN/3PN-63A

Connect only round copper wires to the terminals. See tables below:

Permissible cables for terminals on load disconnector 63 A[1]				
	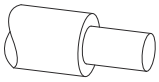	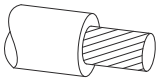	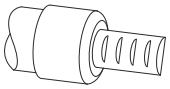	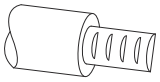
1 conductor per terminal	1 - 25 mm^2	4 - 16 mm^2	2.5 - 16 mm^2	2.5 - 16 mm^2
2 conductors per terminal	≤ 10 mm^2	≤ 10 mm^2	≤ 10 mm^2	≤ 10 mm^2

Permissible cables for terminals on auxiliary contact switch [2]				
	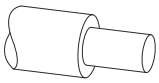	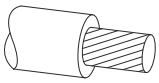	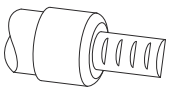	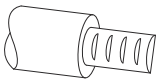
1 conductor per terminal	0.13 - 2.5 mm^2	0.75 - 2.5 mm^2	0.5 - 1.5 mm^2	0.5 - 1.5 mm^2
2 conductors per terminal	0.13 - 2.5 mm^2	0.75 - 2.5 mm^2	0.5 - 1.5 mm^2	0.5 - 1.5 mm^2

[1] Select a sufficiently large cable cross-section. The cable cross-section depends on the actual connected load.

[2] The cable length between the inverter and the Backup Switch must not exceed 30 m (32 yd). Fronius recommends using at least CAT 5 STP (shielded twisted pair) cable types.

Permitted connection screws

	Load disconnector 63 A	Auxiliary contact switch
Connection screw	M5	M3.5
Tightening torque	2 - 4 Nm	0.8 - 1.4 Nm
Conductors per terminal	2	2

Preparing for the installation

Safety

⚠ WARNING

Danger due to short circuits resulting from foreign bodies in the connection area.
An electric shock can lead to serious injury or death.
- ▶ Keep foreign objects away from the connection area or remove them if necessary.

⚠ WARNING

Danger from incorrect operation and work that is not carried out properly.
This can result in severe personal injury and damage to property.
- ▶ Only trained service technicians who have received training from the respective inverter or battery manufacturer are authorized to perform commissioning, maintenance, and service activities for inverters and batteries, and only within the scope of the technical regulations.
- ▶ Read the installation instructions and operating instructions from the respective manufacturer before installing and commissioning the equipment.

⚠ WARNING

Danger from mains voltage and DC voltage from PV modules that are exposed to light, as well as batteries.
This can result in severe personal injury and damage to property.
- ▶ All connection, maintenance and service work should only be carried out when the AC and DC sides have been disconnected from the inverter and battery, and are de-energized.
- ▶ Only an authorized electrical engineer is permitted to make the connection to the public grid.

⚠ WARNING

Danger from damaged and/or contaminated terminals.
This can result in severe personal injury and damage to property.
- ▶ Prior to connection work, check the terminals for damage and contamination.
- ▶ Remove any contamination while the equipment is de-energized.
- ▶ Have defective terminals repaired by an authorized specialist.

General disconnection of the power supply

1

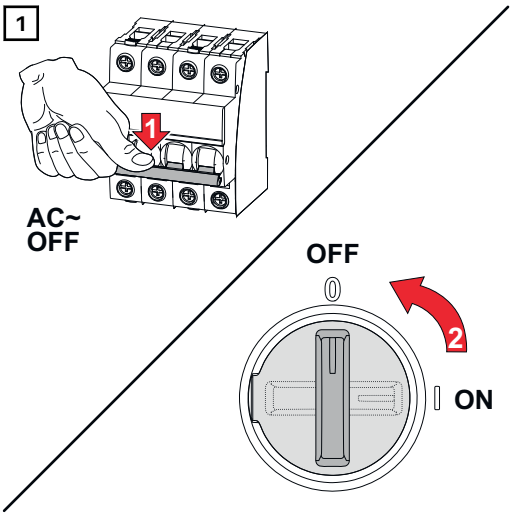

Turn off the automatic circuit breaker. Set the DC disconnector to the "off" (OFF) switch position.

2

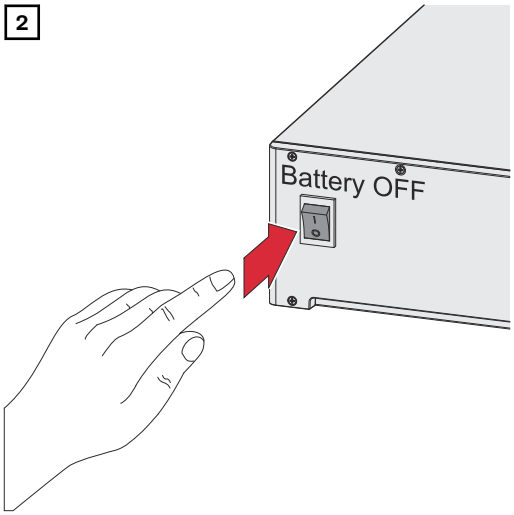

Switch off the battery connected to the inverter.

Wait for the capacitors of the inverter to discharge (2 minutes).

Installation

1

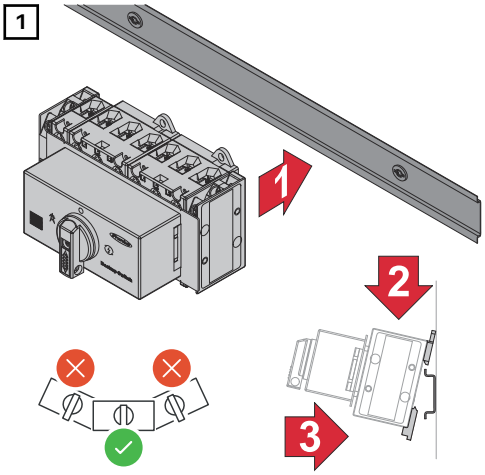

The Fronius Backup Switch can be mounted on a 35 mm DIN rail.

Housing dimensions according to DIN 4388:

- 7.7 TE (horizontal pitch) with left and right end tabs (corresponds to the delivery condition)
- 7.5 TE without end tabs

Disassembly of the switch and the housing cover

Before connecting the cables, the housing cover must be removed.

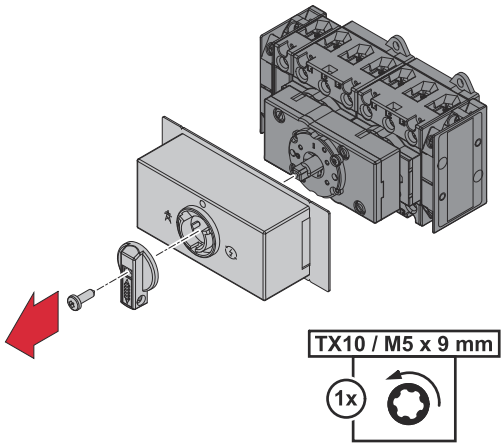

1. Set the switch to position "0".
2. Push the switch lock down.
   ✓ *The switch is now unlocked.*
3. Remove the screw.

✓ *The switch and housing cover can now be removed.*

Stripping lengths

Load disconnector 63 A	Auxiliary contact switch
14 mm (0.55 in.)	8 mm (0.31 in.)

2-pin installation

Connecting the Backup Switch 2-pin to the public grid

⚠ WARNING

Danger from loose and/or incorrectly clamped single conductors in the terminal.
This can result in severe personal injury and damage to property.
- ▶ Check that the single conductors are secure in the terminal.
- ▶ Make sure that the single conductor has been fully inserted into the terminal and that no single wires are protruding out of the terminal.

1 Before starting the connection work, strip all cables of their insulation in accordance with the specifications. See chapter Stripping lengths on page 23.

2

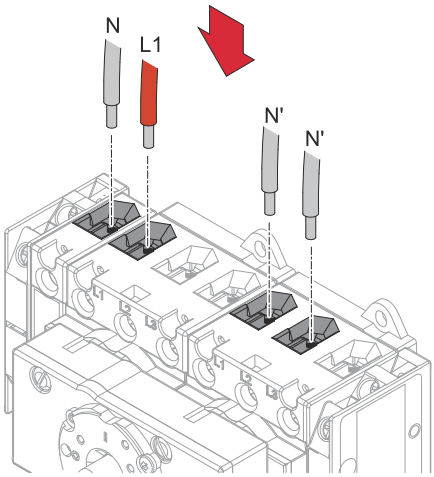

Plug the individual conductor (L1) coming from the grid and the neutral conductor (N) coming from the grid into the terminals. Plug the two neutral conductors (N') from the backup circuit into the terminals.

3

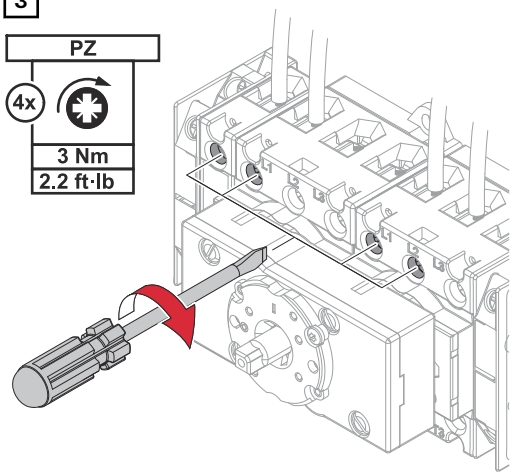

Screw the single conductor (L1) and the neutral conductor (N) into the terminals. Screw the two neutral conductors (N') into the terminals. For permissible connection screws and torques, see Permitted connection screws on page 20.

Connecting 2-pin loads in the backup power circuit to the Backup Switch

⚠ WARNING

Danger from loose and/or incorrectly clamped single conductors in the terminal.
This can result in serious injury and damage to property.
- ▶ Check that the single conductors are secure in the terminal.
- ▶ Make sure that the single conductor has been fully inserted into the terminal and that no single wires are protruding out of the terminal.

1 Before starting the connection work, strip all cables of their insulation in accordance with the specifications. See chapter Stripping lengths on page 23.

2

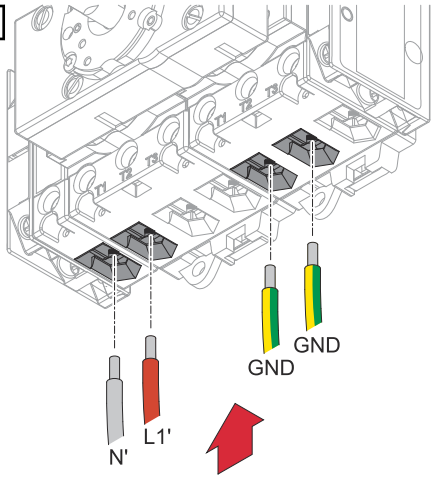

Plug the individual conductor (L1') coming from the backup power circuit and the neutral conductor (N') coming from the backup power circuit into the terminals. Plug the grounding cables (GND) of the house wiring into the terminals.

3

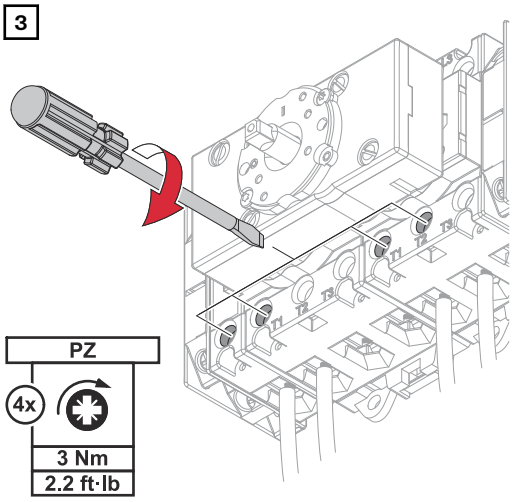

Screw the single conductor (L1') and the neutral conductor (N') into the terminals. Screw the grounding cables (GND) of the house wiring into the terminals.

4-pin installation

Connecting the Backup Switch 4-pin to the public grid

⚠ WARNING

Danger from loose and/or incorrectly clamped single conductors in the terminal.
This can result in severe personal injury and damage to property.
- ▶ Check that the single conductors are secure in the terminal.
- ▶ Make sure that the single conductor has been fully inserted into the terminal and that no single wires are protruding out of the terminal.

1 Before starting the connection work, strip all cables of their insulation in accordance with the specifications. See chapter Stripping lengths on page 23.

2

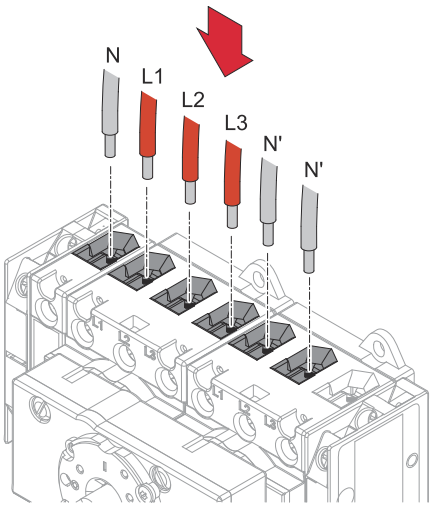

Plug the individual conductor (L1, L2, L3) coming from the grid and the neutral conductor (N) coming from the grid into the terminals. Plug the two neutral conductors (N') from the backup circuit into the terminals.

3

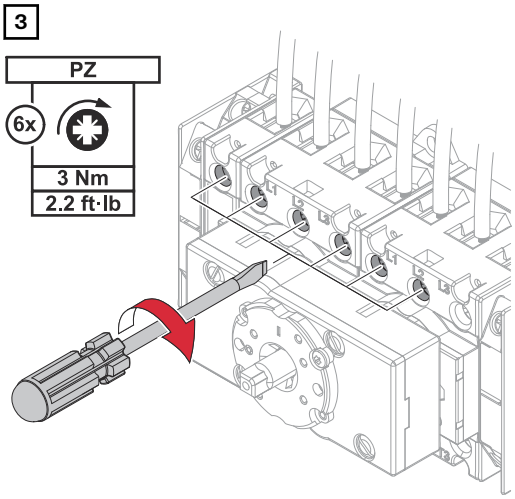

Screw the single conductors (L1, L2, L3) and the neutral conductor (N) into the terminals. Screw the two neutral conductors (N') into the terminals. For permissible connection screws and torques, see Permitted connection screws on page 20.

Connecting 4-pin loads in the backup power circuit to the Backup Switch

⚠ WARNING

Danger from loose and/or incorrectly clamped single conductors in the terminal.
This can result in serious injury and damage to property.
- ▶ Check that the single conductors are secure in the terminal.
- ▶ Make sure that the single conductor has been fully inserted into the terminal and that no single wires are protruding out of the terminal.

1 Before starting the connection work, strip all cables of their insulation in accordance with the specifications. See chapter Stripping lengths on page 23.

2

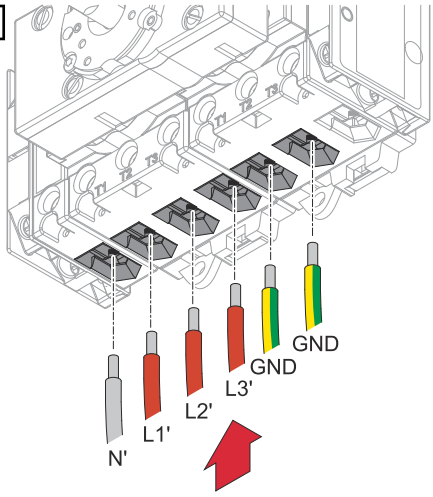

Plug the individual conductors (L1', L2', L3') coming from the backup power circuit and the neutral conductor (N') coming from the backup power circuit into the terminals. Plug the grounding cables (GND) of the house wiring into the terminals provided.

3

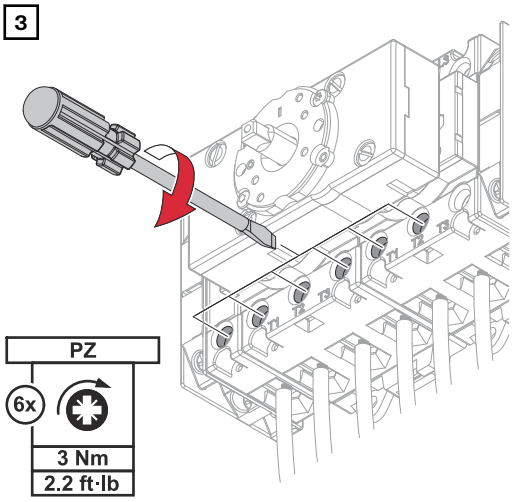

Screw the single conductors (L1', L2', L3') and the neutral conductor (N') into the terminals. Screw the grounding cables (GND) of the house wiring into the terminals.

Connecting the data communication cables

Description of the data communication

Feedback switch in backup power position (IN6/IN7)
When the Fronius Backup Switch is switched to backup power supply, the inverter checks the position of the switch. If this position is correct, the backup power supply of the connected loads in the backup power circuit is enabled.

Communication Modbus Fronius Smart Meter (M+/M-)
The communication between the inverter and the Fronius Smart Meter is interrupted via the contact. The interrupted communication prevents automatic termination of backup power mode. The inverter remains in backup power mode. Once a stable power supply from the grid is available again, the switch of the Fronius Backup Switch must be changed manually to grid operation.
If backup power mode is to be automatically terminated once the public grid is available again, do not route the communication line via the Fronius Backup Switch.

Wired Shut Down (WSD IN-/WSD IN+)
In the "O" switch position, the WSD line is interrupted. The inverter switches off immediately. An asynchronous switchback to the grid is prevented.

Notes on data communication

IMPORTANT!

Observe the following information regarding connection of the data communication cables to the Backup Switch.
- Use network cables of type CAT5 STP or higher.
- Use a twisted cable pair for data communication cables that belong together.
- Use double insulated or sheathed data communication cables when they are near to bare conductors.

Data communication – Modbus RTU option

Smart Meter	Pin		
IP	M-	GND	M+
50kA-3	B	C	A
63A-1	34	35	33
63A-3	B	C	A
TS 5kA-3	12	13	11
TS 65A-3	9	10	8
TS 100A-1	5	6	4

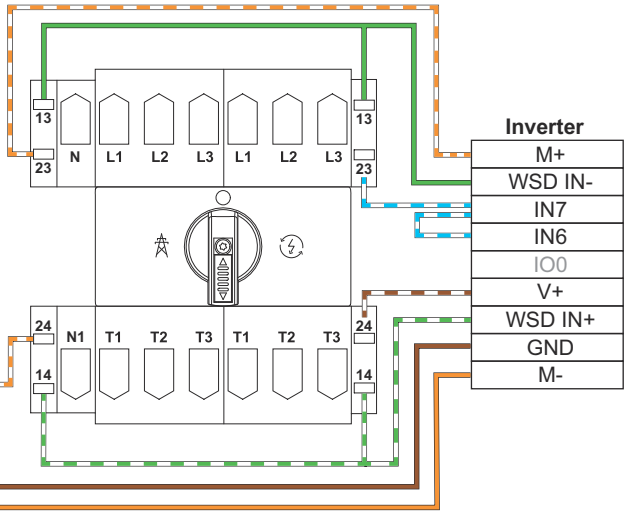

When using Modbus RTU, the power supply of the Fronius Smart Meter IP is interrupted in backup power mode via the contacts 23/24 of an auxiliary contact switch. This prevents automatic termination of backup power mode when the public power grid is available again.

Data communication – Modbus TCP/IP | MQTT option

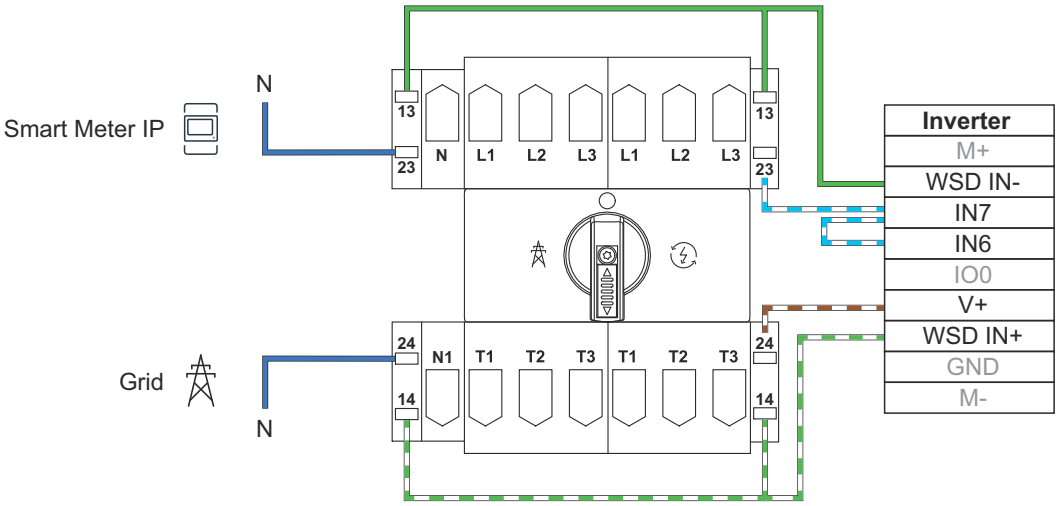

When using Modbus TCP/IP or MQTT, the neutral conductor and thus the power supply of the Fronius Smart Meter IP is interrupted in backup power mode via the contacts 23/24 of an auxiliary contact switch. This prevents automatic termination of backup power mode when the public power grid is available again.

Mounting the protective cover

Mounting the protective covers

WARNING

Danger due to electrical voltage from missing or incorrectly fitted protective covers.
Electric shocks can be fatal and/or cause serious property damage.
- ▶ Fit the protective covers immediately after installing the live cables
- ▶ Fit the protective covers correctly and check that they are secure.

IMPORTANT!
The protective covers are used for additional insulation of the live lines to the data transfer lines.

1

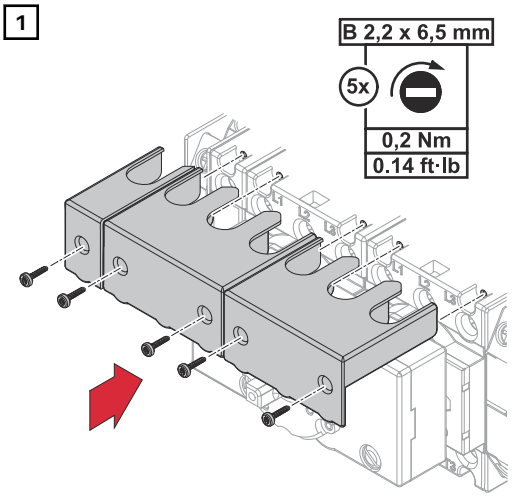

Mount a top protective cover on each of the load disconnectors 63 A. Fit using the screws supplied with the delivery.

2

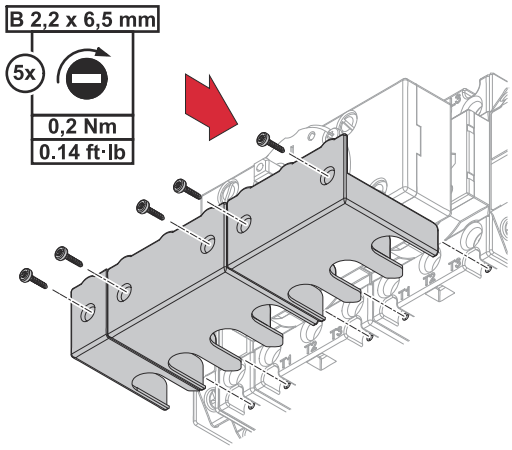

Mount a bottom protective cover on each of the load disconnectors 63 A. Fit using the screws supplied with the delivery.

Mounting housing cover and switch

Mounting the housing cover and the switch

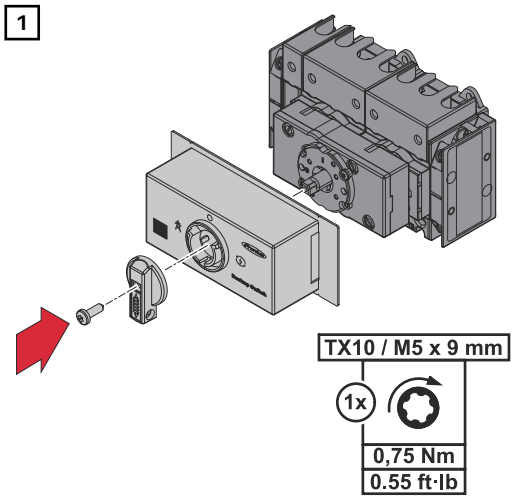

Install the housing cover and the switch and secure with the screw.

Commissioning

Putting the PV system into operation

1

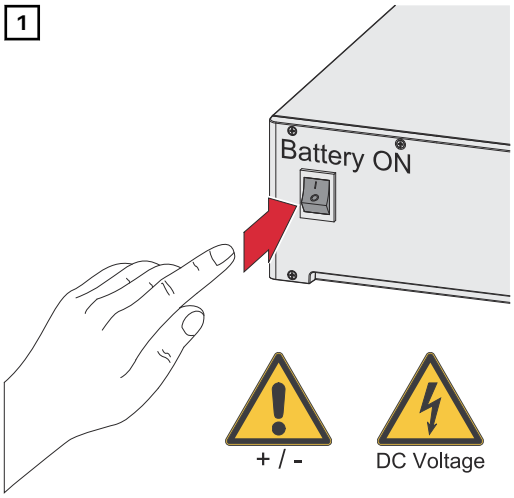

Switch on the battery connected to the inverter.

2

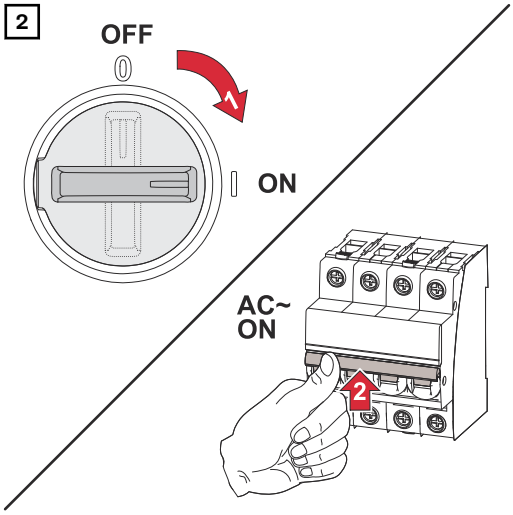

Set the DC disconnector to the "on" switch position. Turn on the automatic circuit breaker.

General

IMPORTANT!
Settings in the **Device configuration** > **Functions and I/Os** menu item may only be implemented by a technical specialist! The technician password must be entered for the **Device configuration** menu item.

Backup power - Configuring Full Backup

1 Call up the user interface of the inverter.
- Open web browser.
- In the address bar of the browser, enter the IP address (**WiFi:** 192.168.250.181, **LAN:** 169.254.0.180) or enter and confirm the host and domain name of the inverter.

✓ *The user interface of the inverter is displayed.*

2 Log in to the login area with user **Technician** and the technician password.

3 Activate the **Backup Power** function in the **Device Configuration** > **Functions and I/Os** menu area.

4 Select **Full Backup** mode in the **Backup power mode** drop-down list.

5 Click the **Save** button to save the settings.

✓ *The Full Backup power mode has been configured.*

Testing backup power mode

Testing backup power mode:
- during first-time installation and configuration
- after working on the switch cabinet
- during ongoing operation (recommendation: at least every 6 months)

A battery charge of min. 30% is recommended for test mode.

A description of how to run the test mode can be found in the checklist – Backup power (https://www.fronius.com/de/download-center?search-word=42,0426,0365).

Manual system start in backup power mode

Failure to manually switch to backup power mode within the first 10 minutes of a public grid outage may cause the inverter and battery to be shut down automatically. In order to start backup power mode, the manual switchover must be carried out and, if necessary, a manual system start must be carried out.

1. Switch the switch of the Backup Switch to the "Backup power mode" setting.
2. Switch on the inverter and the battery (observe the switch-on sequence).

IMPORTANT!
Depending on the battery manufacturer, follow the switch-on sequence recommended by the manufacturer for system startup. Please refer to the inverter or battery operating instructions for further information.

Technical data

Technical data

Technical data

Technical data [1]		Load discon-nector 63 A	Auxiliary contact switch
Thermal rated operating current			
open I_{th}		63 A	10 A
encapsulated I_{the}		63 A	
Rated insulation voltage U_i [2]		690 V	690 V
Breaking capacity I_{eff}			
3 x 220 - 440 V		330 A	
3 x 500 V		330 A	
3 x 660 - 690 V		190 A	
Utilization categories AC21A, AC21B			
Rated operating current I_e	400 V	63 A	
Rated operating power	220 - 240 V	24 kW	
	380 - 440 V	42 kW	
3-phase 3-pin	660 - 690 V	72 kW	
Utilization categories AC23A, AC23B			
Rated operating current I_e	400 V	45 A	
Rated operating power	220 - 240 V	15 kW	
	380 - 440 V	22 kW	
	660 - 690 V	18.5 kW	
Fuse	gL (gG)	max. 63 A	max. 20 A

General data	
Weight	526 g
Permitted ambient temperature	-40 to +60 °C
Dimensions	64 x 135.4 x 91 mm
Protection class	IP20 + KLAD
Mains frequency	50 - 60 Hz
Nominal voltage	3 - 230 / 400 V
Grid disconnection	2-pin or 4-pin
Conditional rated short-circuit current I_{cc}	10 kA

[1] According to IEC 947-3, IEC 947-5-1, VDE 0660, EN 60947-3, EN 60947-5-1

[2] Applies to: Grids with grounded neutral point, overvoltage category I to III, pollution degree 3: Uimp = 6kV.

Service, warranty terms and conditions, and disposal

Service, warranty terms and conditions, and disposal

Maintenance

Maintenance and service work may only be carried out by a technical specialist.

Warranty

Detailed warranty conditions specific to your country can be found at https://www.fronius.com/en/download-center?searchword=Warranty+conditions .

If there is a warranty for the relevant product, register the product at https://warranty.fronius.com/ and activate or extend the warranty.

Disposal

In accordance with the EU Directive and national law, the following products must be disposed of separately and recycled:
- Waste electrical and electronic equipment
- Used batteries (portable batteries, industrial batteries)

Used equipment and batteries must be returned to the distributor or an authorized local collection system. Do not dispose of batteries with domestic waste. Protect batteries from high temperatures, direct sunlight, moisture and corrosive environments.

Arrange for the safe collection and proper disposal of damaged, leaking or used batteries by a battery recycling company or the Fronius Service Partner.

In addition, it should be noted that batteries contain substances that, if disposed of improperly, can have a significant negative impact on the environment as well as on human health and the safety of persons, in particular due to the leakage of hazardous substances such as heavy metals or electrolytes, which can contaminate soil, water and air.

This ensures environmental protection and the sustainable use of natural resources.

Packaging materials
- Collect separately
- Observe local regulations
- Compress the cardboard box to reduce volume

Circuit Diagrams

Manual switch to backup power 2-pin separation, e.g., Germany

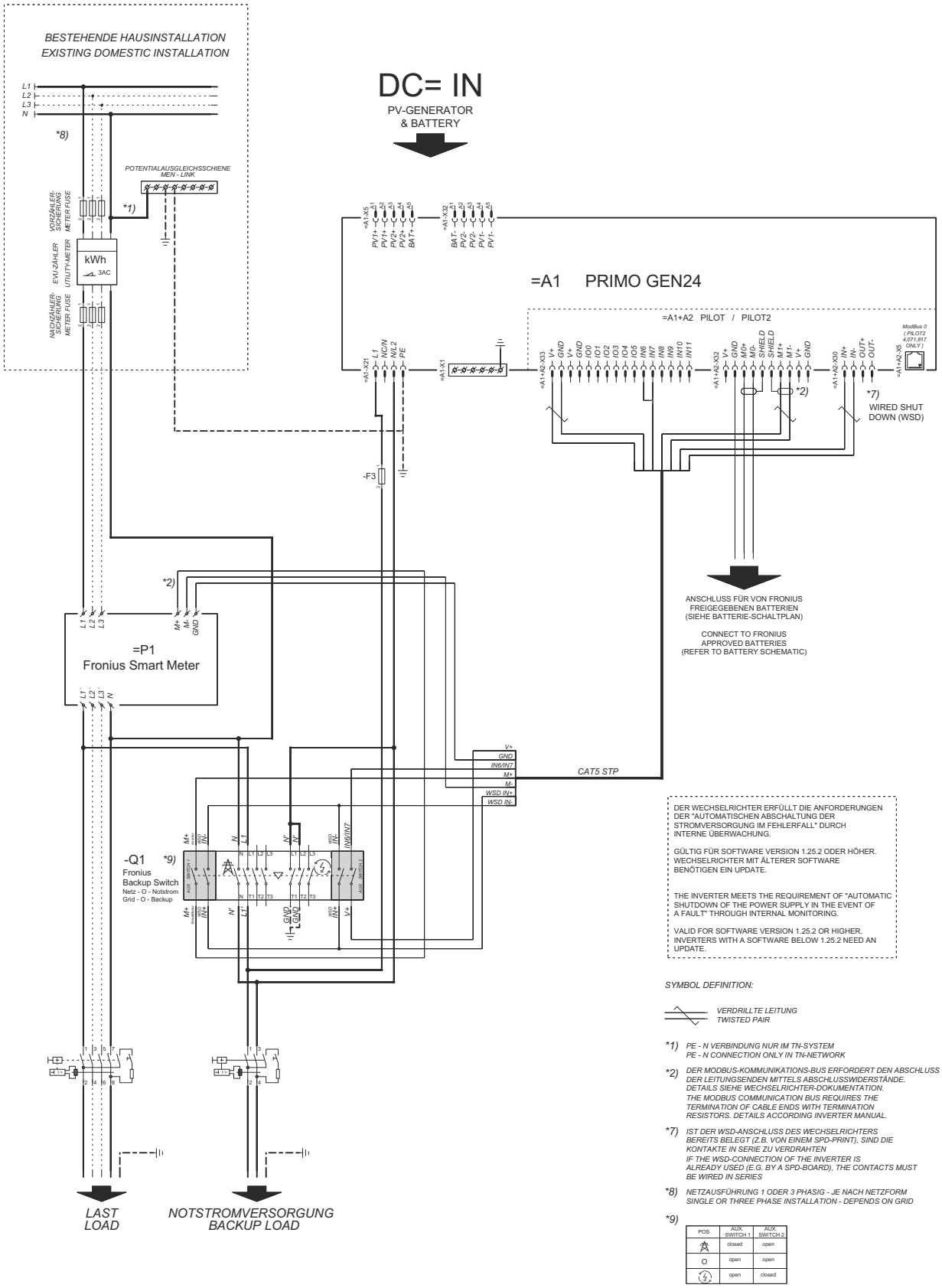

DER WECHSELRICHTER ERFÜLLT DIE ANFORDERUNGEN DER "AUTOMATISCHEN ABSCHALTUNG DER STROMVERSORGUNG IM FEHLERFALL" DURCH INTERNE ÜBERWACHUNG.

GÜLTIG FÜR SOFTWARE VERSION 1.25.2 ODER HÖHER. WECHSELRICHTER MIT ÄLTERER SOFTWARE BENÖTIGEN EIN UPDATE.

THE INVERTER MEETS THE REQUIREMENT OF "AUTOMATIC SHUTDOWN OF THE POWER SUPPLY IN THE EVENT OF A FAULT" THROUGH INTERNAL MONITORING.

VALID FOR SOFTWARE VERSION 1.25.2 OR HIGHER. INVERTERS WITH A SOFTWARE BELOW 1.25.2 NEED AN UPDATE.

SYMBOL DEFINITION:

VERDRILLTE LEITUNG
TWISTED PAIR

**1) PE - N VERBINDUNG NUR IM TN-SYSTEM*
PE - N CONNECTION ONLY IN TN-NETWORK

**2) DER MODBUS-KOMMUNIKATIONS-BUS ERFORDERT DEN ABSCHLUSS DER LEITUNGSENDEN MITTELS ABSCHLUSSWIDERSTÄNDE. DETAILS SIEHE WECHSELRICHTER-DOKUMENTATION.*
THE MODBUS COMMUNICATION BUS REQUIRES THE TERMINATION OF CABLE ENDS WITH TERMINATION RESISTORS. DETAILS ACCORDING INVERTER MANUAL.

**7) IST DER WSD-ANSCHLUSS DES WECHSELRICHTERS BEREITS BELEGT (Z.B. VON EINEM SPD-PRINT), SIND DIE KONTAKTE IN SERIE ZU VERDRAHTEN*
IF THE WSD-CONNECTION OF THE INVERTER IS ALREADY USED (E.G. BY A SPD-BOARD), THE CONTACTS MUST BE WIRED IN SERIES

**8) NETZAUSFÜHRUNG 1 ODER 3 PHASIG - JE NACH NETZFORM*
SINGLE OR THREE PHASE INSTALLATION - DEPENDS ON GRID

**9)*

POS.	AUX. SWITCH 1	AUX. SWITCH 2
	closed	open
O	open	open
	open	closed

Manual switch to backup power 3-pin separation with grid and system protection

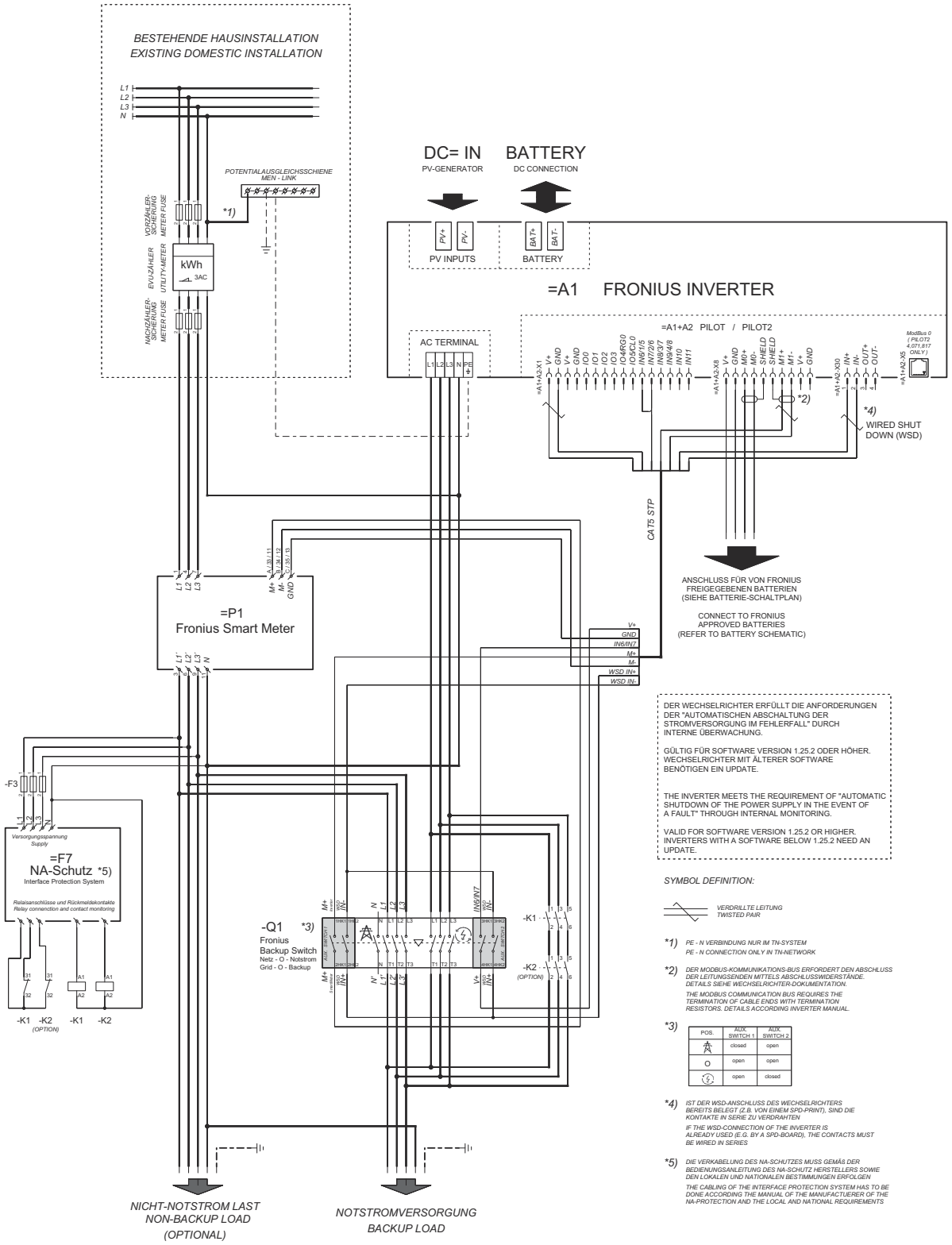

Manual switch to backup power 4-pin separation, e.g., Germany

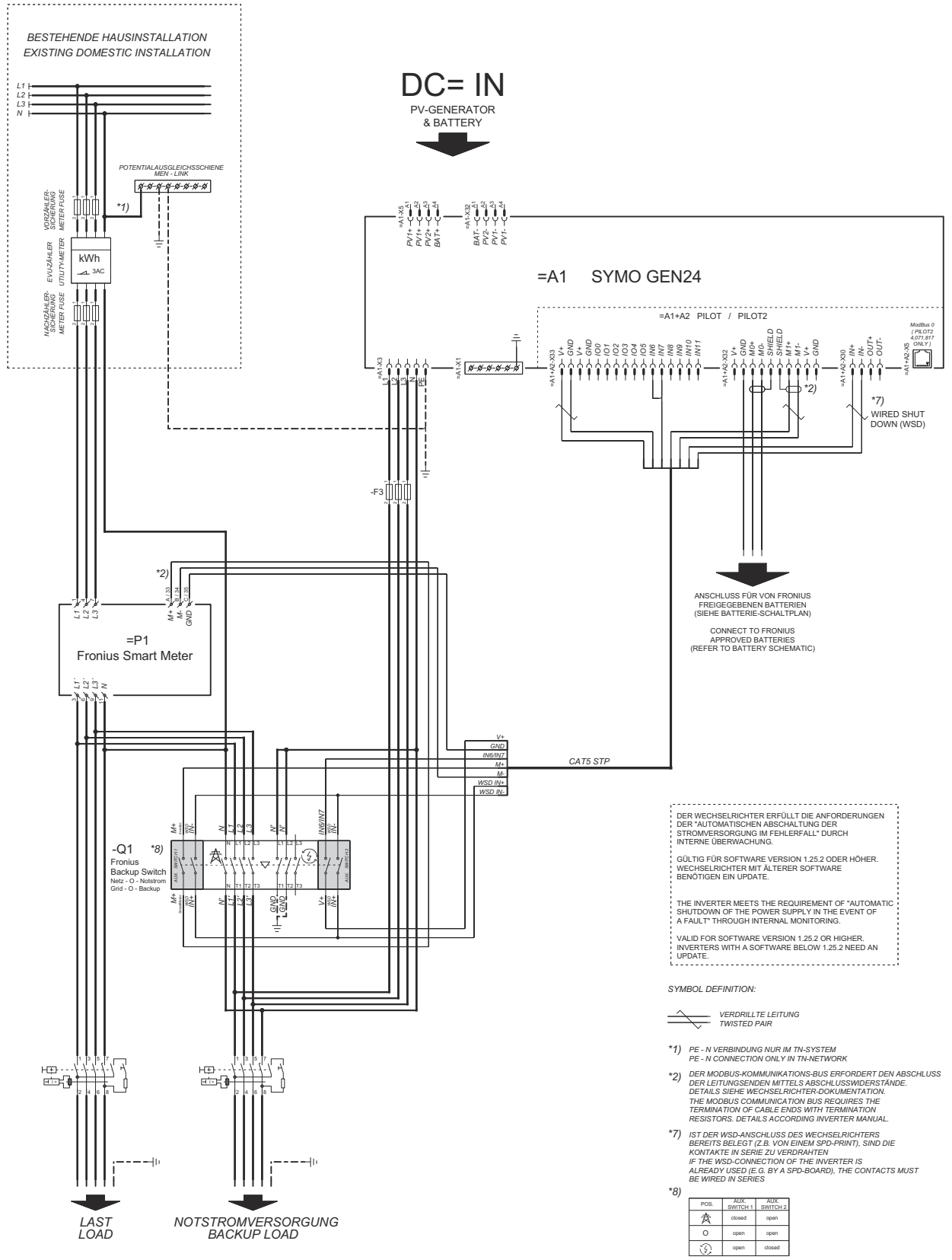

DER WECHSELRICHTER ERFÜLLT DIE ANFORDERUNGEN DER "AUTOMATISCHEN ABSCHALTUNG DER STROMVERSORGUNG IM FEHLERFALL" DURCH INTERNE ÜBERWACHUNG.

GÜLTIG FÜR SOFTWARE VERSION 1.25.2 ODER HÖHER. WECHSELRICHTER MIT ÄLTERER SOFTWARE BENÖTIGEN EIN UPDATE.

THE INVERTER MEETS THE REQUIREMENT OF "AUTOMATIC SHUTDOWN OF THE POWER SUPPLY IN THE EVENT OF A FAULT" THROUGH INTERNAL MONITORING.

VALID FOR SOFTWARE VERSION 1.25.2 OR HIGHER. INVERTERS WITH A SOFTWARE BELOW 1.25.2 NEED AN UPDATE.

SYMBOL DEFINITION:

VERDRILLTE LEITUNG
TWISTED PAIR

*1) *PE - N VERBINDUNG NUR IM TN-SYSTEM*
PE - N CONNECTION ONLY IN TN-NETWORK

*2) *DER MODBUS-KOMMUNIKATIONS-BUS ERFORDERT DEN ABSCHLUSS DER LEITUNGSENDEN MITTELS ABSCHLUSSWIDERSTÄNDE. DETAILS SIEHE WECHSELRICHTER-DOKUMENTATION.*
THE MODBUS COMMUNICATION BUS REQUIRES THE TERMINATION OF CABLE ENDS WITH TERMINATION RESISTORS. DETAILS ACCORDING INVERTER MANUAL.

*7) *IST DER WSD-ANSCHLUSS DES WECHSELRICHTERS BEREITS BELEGT (Z.B. VON EINEM SPD-PRINT), SIND DIE KONTAKTE IN SERIE ZU VERDRAHTEN*
IF THE WSD-CONNECTION OF THE INVERTER IS ALREADY USED (E.G. BY A SPD-BOARD), THE CONTACTS MUST BE WIRED IN SERIES

*8)

POS.	AUX. SWITCH 1	AUX. SWITCH 2
	closed	open
O	open	open
	open	closed

fronius.com/en/solar-energy/installers-partners/products-solutions/monitoring-digital-tools

MONITORING &
DIGITAL TOOLS

Fronius International GmbH
Froniusstraße 1
4643 Pettenbach
Austria
contact@fronius.com
www.fronius.com

At www.fronius.com/contact you will find the contact details of all Fronius subsidiaries and Sales & Service Partners.