Operating Instructions

Fronius Verto
15.0 / 17.5
20.0 / 24.0
25.0 400

EN | Operating Instructions

42,0426,0531,EA 018-22092026

Table of contents

General information **7**

Safety information 9
Explanation of warnings and safety instructions 9
Safety instructions and important information 9
Environmental conditions 10
Data on noise emission values 10
EMC measures 11
Ground conductor 11
Fire risk management in photovoltaic systems 11
Protection of people and equipment 13
Central grid and system protection 13
WSD (wired shutdown) 13
RCMU 13
Insulation monitoring 13
AFCI - Arc Fault Circuit Interrupter (Arc Guard) 13
Safe state 14
General 15
Information on the device 15
How information is presented in the document 16
Target group 16
Data security 16
Privacy policy 17
Copyright 18
Fronius Verto 19
Device concept 19
Scope of supply 19
Thermal concept 20
Fronius Solar.web 20
Local communication 20
Utilization in accordance with "intended purpose" 22
Intended use 22
Foreseeable misuse 22
Provisions for the photovoltaic system 22
Surge protection device (SPD) 23
Surge protection device SPD 23
Operating controls and connections 24
Connection area 24
PV connections 25
Ground electrode bolt 25
Installation option for third-party components 25
DC disconnector 26
Data communication area 26
Button functions and LED status indicator 27
Schematic internal wiring of IOs 29

Installation **31**

General 33
Tools required 33
Quick-fastener system 33
System component compatibility 34
Installation location and position 35
Choosing the location of the inverter 35
Choosing the location of third-party batteries 36
Installation position of inverter 37
Installing the mounting bracket and attaching the inverter 38
Selecting the mounting material 38

Properties of the mounting bracket 38
Do not deform the mounting bracket 38
Fitting the mounting bracket to a wall 38
Attaching the inverter to the mounting bracket 39
Requirements for connecting the inverter 40
Connecting aluminum cables 40
Different cable types 40
Permitted cables for the electrical grid connection 40
Permitted cables for the electrical DC connection 40
Permitted cables for the data communication connection 41
Cable diameter of the AC cable 41
Maximum alternating current fuse protection 42
Connecting the inverter to the public grid (AC side) 43
Safety 43
Connecting the inverter to the public grid (AC side) 43
Connecting the inverter to the public grid with the PEN conductor (AC side) 46
Replacing the PG screw joint 48
Connecting solar module strings to the inverter 49
General information about PV modules 49
Safety 49
PV Generator, general 50
Connecting solar module strings to the inverter 50
Connecting the data communication cables 52
Modbus participants 52
Routing data communication cables 54
Installing the WSD (wired shutdown) 56
Closing and commissioning the inverter 57
Closing the inverter's connection area/housing cover, and commissioning 57
Starting the inverter for the first time 58
Installation with the app 58
Installation with the browser 58
De-energizing the inverter and switching it back on 60
Risk of rupture 60
De-energizing the inverter and switching it back on 60

Settings – User interface of the inverter 61

User settings 63
User login 63
Selecting languages 63
Device configuration 64
Components 64
Functions and I/Os 64
Inverter 65
System 69
General 69
Update 69
Setup wizard 69
Restoring factory settings 69
Event log 69
Information 69
License Manager 69
Licensing 70
Support 70
Communication 72
Network 72
Modbus 73
Cloud control 75
Solar API 75
Fronius Solar.web 75
Safety and grid requirements 77
Country setup 77

Requesting inverter codes in Solar.SOS ... 77
Absolute Generation Limit ... 78
Import limitation ... 78
Feed-in limit ... 78
Feed-in limit – examples ... 80
Multiple Inverter Control ... 81
I/O Power Management ... 84
4-relay connection example ... 85
I/O power management settings – 4 relay example ... 87
3-relay connection example ... 87
I/O power management settings – 3 relay example ... 89
2-relay connection example ... 89
I/O power management settings – 2 relay example ... 91
1-relay connection example ... 91
I/O power management settings – 1 relay example ... 93
Connecting the ripple control receiver with several inverters ... 93

Appendix **95**

Service, maintenance and disposal ... 97
General ... 97
Maintenance ... 97
Cleaning ... 97
Operation in dusty environments ... 97
Safety ... 98
Disposal ... 98
Warranty provisions ... 100
Warranty ... 100
Status codes and remedy ... 101
Display ... 101
Status codes ... 101
Technical data ... 102
Verto 15.0 ... 102
Verto 17.5 ... 103
Verto 20.0 ... 105
Verto 24.0 ... 106
Verto 25.0 400 ... 108
Protection devices ... 110
WLAN ... 110
Data communication ... 110
Surge protection device DC SPD type 2 ... 111
Explanation of footnotes ... 111
Integrated DC disconnector ... 112

General information

Safety information

Explanation of warnings and safety instructions

Warnings are intended to warn people of possible injuries and to avoid personal injury and damage to the product. They relate to individual actions with and on the product.

⚠ DANGER

Indicates an immediately dangerous situation.
Serious injury or death will result if the danger is not avoided.
▶ Action step to escape the situation.

⚠ WARNING

Indicates a potentially dangerous situation.
Serious injury or death may result if the danger is not avoided.
▶ Action step to escape the situation.

⚠ CAUTION

Indicates a potentially dangerous situation.
Minor or moderate injury may result if the danger is not avoided.
▶ Action step to escape the situation.

NOTE

Indicates a situation that may result in property damage.
If the situation is not avoided, impaired work results, material damage to the product or other property are the possible consequences.
▶ Action step to avoid the situation.

Safety instructions are designed to ensure safe product use. They are preventive and help to inform users about the fundamental risks involved when dealing with the product. They do not refer specifically to individual actions with and on the product.

Safety instructions and important information

The device has been manufactured in line with the state of the art and according to recognized safety standards.

⚠ WARNING

Incorrect operation or misuse
Serious to fatal injuries to the operator or third parties as well as damage to the device and other property of the operator may result.
▶ All persons involved in the commissioning, maintenance, and servicing of the device must be appropriately qualified and have knowledge of working with electrical installations.
▶ Read these operating instructions in full and follow them carefully and precisely.
▶ The operating instructions must always be kept to hand wherever the device is being used.

IMPORTANT!
In addition to the operating instructions, observe the following general and local rules:
- Accident prevention
- Fire protection
- Environmental protection

IMPORTANT!
Labels, warning notices, and safety symbols are located on the device. A description can be found in these operating instructions.

IMPORTANT!
All safety and danger notices on the device:
- Must be kept in a legible state
- Must not be damaged/marked
- Must not be removed
- Must not be covered, have anything stuck on them, or painted over

⚠ WARNING

Tampered-with and non-functioning protection devices
Serious to fatal injuries as well as damage to the device and other property of the operator may result.
- ▶ Never bypass or disable protection devices.
- ▶ Any protection devices that are not fully functional must be repaired by an authorized specialist before the device is switched on.

⚠ WARNING

Loose, damaged, or under-dimensioned cables
An electric shock can be fatal.
- ▶ Use undamaged, insulated, and adequately dimensioned cables.
- ▶ Fasten the cables according to the specifications in the operating instructions.
- ▶ Loose, damaged, or under-dimensioned cables must be repaired or replaced immediately by an authorized specialist.

NOTE

Installations or modifications to the device
The device may be damaged
- ▶ Do not carry out any alterations, installations, or modifications to the device without first obtaining the manufacturer's permission.
- ▶ Damaged components must be replaced.
- ▶ Only use original spare parts.

Environmental conditions

Operation or storage of the machine outside the stipulated area will be deemed as not in accordance with the intended purpose.

For exact information on permitted environmental conditions, please refer to the technical data.

Data on noise emission values

The sound pressure level of the inverter is indicated in the Technical data.

The cooling of the device takes place via an electronic temperature control system at the lowest possible noise level and depends on the power used, ambient temperature, and the soiling level of the device, etc.

It is not possible to provide a workplace-related emission value for this device, because the actual sound pressure level is heavily influenced by the installation situation, the power quality, the surrounding walls, and the properties of the room in general.

EMC measures

In certain cases, even though a device complies with the standard limit values for emissions, it may affect the application area for which it was designed (e.g., when there is equipment that is susceptible to interference at the same location or if the site where the device is installed is close to either radio or television receivers). If this is the case, the operator is obliged to take action to rectify the situation.

Ground conductor

Connection of a point in the device, system, or installation to ground to protect against electric shock in the event of a fault. When installing an inverter from safety class 1 (see Technical data), a ground conductor connection is required.

When connecting the ground conductor, ensure that it is secured to prevent unintentional disconnection. All of the points listed in the chapter headed Connecting the inverter to the public grid (AC side) on page 43 must be observed. When using cable glands, ensure that the ground conductor is last to be subjected to a load in the event of a failure of the cable gland. The respective national standards and regulations and requirements for minimum cross-section must be observed when connecting the ground conductor.

Fire risk management in photovoltaic systems

Attention: The installation of this equipment must comply with current technical standards for photovoltaic electrical installation (NBR 16690) and fire risk management in photovoltaic systems (IEC TR 63226)".

Attention: It is expressly recommended to use rapid shutdown methods, systems or devices on the dc circuit that guarantee safety in firefighting situations".

However, as rapid shutdown devices may increase the number of DC connectors, which may increase the risk of fire (as stated in IEC TR 63226, §6.4), Fronius recommends using the methods listed below (with reference to sections of IEC TR 63226) to support firefighters in emergency situations:

- **Keeping DC circuits as short as possible:** this can be achieved by placing the inverter close to the roof, or to the entry point of the DC cables into the building (§6.2.2)
- **Indication of the presence of a PV system in the building (§6.2.5) and marking of DC cables (§6.2.3).**
- **Consideration of access pathways and escape routes during system planning (§6.2.4).**
- **DC cable routing outside the building:** this can be achieved, for instance, by installing the inverter and the DC cables outside the building (§6.5).
- **Use of fire-resistant cable raceways:** this prevents touching a damaged DC cable (§6.6).
- **Installation of DC cables behind walls or other building elements to protect cables from contact (§6.6).**

The above measures are provided as possible options for firefighter protection in the IEC TR 63226, as well as in other national fire safety regulations (such as

VDE-AR-E 2100-712 in Germany, and OVE R11-1 in Austria) and guidelines from 3rd party organizations (TÜV Rheinland, Fraunhofer ISE, German Solar Industry Association - BSW).

Protection of people and equipment

Central grid and system protection

The inverter offers the option to use the integrated AC relays as section switches in conjunction with a central grid and system protection unit (in accordance with VDE-AR-N 4105:2018:11 § 6.4.1). For this purpose, integrate the central trigger device (switch) into the WSD chain as described in chapter 13 on page WSD (wired shutdown).

Grid and system protection for systems with multiple inverters

- Regional standards and guidelines may require the installation of external grid and system protection for systems >30 kVA.
- External grid and system protection can be omitted if the following conditions are met:
  - A Fronius Smart Meter IP performs the external voltage measurement.
  - The Fronius Smart Meter IP communicates with the primary device via the MQTT protocol.
  - The **On at Smart Meter** option is selected in the country setup in the **Long Time Average Limit** menu for each device. This equates to grid and system protection with remote voltage measurement.
  - On the user interface of the secondary device, the **Multiple Inverter Control** function is disabled.

WSD (wired shutdown)

The wired shutdown (WSD) interrupts the inverter's grid power feed if the trigger device (switch, e.g., Emergency Stop or fire alarm contact) has been activated.

If an inverter (slave) fails, it is bypassed and the other inverters continue operating. If a second inverter (slave) or the inverter (master) fails, the operation of the entire WSD chain is interrupted.

For installation, see Installing the WSD (wired shutdown) on page 56.

RCMU

The inverter is equipped with an RCMU (RCMU = residual current monitoring unit) according to IEC 62109-2 and IEC63112.
It monitors residual currents from the PV module up to the AC output and disconnects the inverter from the grid when an improper residual current is detected.

Insulation monitoring

In the case of photovoltaic systems with ungrounded PV modules, the inverter checks the resistance between the positive or negative pole of the photovoltaic system and the ground potential before starting grid power feed operation. In the event of a short circuit between the DC+ or DC- cable and ground (e.g., due to inadequately insulated DC cables or defective PV modules), feeding into the public grid is prevented.

AFCI - Arc Fault Circuit Interrupter (Arc Guard)

An AFCI (Arc Fault Circuit Interrupter) protects against arc faults and is a protective device in the event of contact errors. The Arc Fault Circuit Interrupter monitors faults that occur in the current and voltage flow on the DC side and shuts down the circuit with an electronic circuit if a contact error is detected.

The function prevents overheating at poor contact points and fires. When delivered, the Arc Guard function is disabled

In the Technical data chapter, check whether the Arc Fault Circuit Interrupter is available for the device in question.

⚠ WARNING

Arc faults due to faulty or incorrect DC installation
Risk of fire as well as serious injuries and damage to the inverter and PV system.
- ▶ Connection work must be carried out in accordance with the technical specifications.
- ▶ Check the plug connections to ensure that they are in proper condition.
- ▶ Professionally repair faulty insulation.

IMPORTANT! Despite the integrated Arc Fault Circuit Interrupter and arc interruption, damage to the device as well as to other system components may occur (e.g., due to a parallel arc).

IMPORTANT! Active PV module electronics (e.g., power optimizers) can impair the function of the Arc Fault Circuit Interrupter. We cannot guarantee that the Arc Fault Circuit Interrupter will work correctly in combination with active PV module electronics.

Reconnection behavior
The inverter interrupts grid power feed operation and stops PV power generation after an arc has been detected. The configuration in the **Country Setup** > **Safety** > **DC Arc Fault Protection** menu item determines whether or not the inverter automatically resumes PV power generation and grid power feed operation. If more arcs have been detected within 24 hours than are set in **Automatic Reconnects**, a manual reconnection needs to be performed.

Safe state

In the safe state, the inverter infeed is deactivated and is disconnected from the grid by the AC relay opening. The inverter switches to the safe state when the following events occur:

1. One of the following safety devices triggers:
   - WSD
   - Insulation monitoring
   - RCMU
   - AFCI
2. The diagnostic function of the inverter detects a malfunction of these safety devices.

General

Information on the device

Technical data, warning notices, labels, and safety symbols are located on and in the inverter. This information must be kept in a legible condition and must not be removed, covered, pasted over, or painted over. They warn against incorrect operation, which may result in serious injury and property damage.

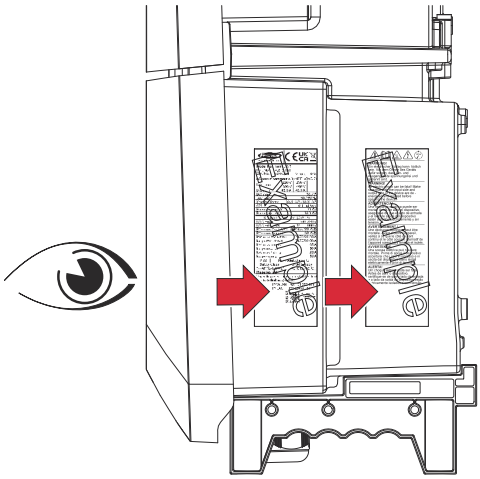

Symbols on the rating plate:

CE label – confirms compliance with applicable EU directives and regulations.

WEEE marking – waste electrical and electronic equipment must be collected separately and recycled in an environmentally sound manner in accordance with the European Directive and national law.

Safety symbols:

Integrated switch disconnector on the input side of the inverter with switch-on, switch-off, and isolating function according to IEC 60947-3 and AS 60947.3. The values required by the applicable standard for Ithe solar +60°C are given.

General warning sign
Observe the danger shown on the additional sign(s).

Observe instructions
Do not use the functions described here until you have fully read and understood the following documents:
- These operating instructions, especially the safety rules.
- Read and understand all operating instructions for the system components of the photovoltaic system, especially the safety rules.

Warning of hot surface
Take care not to come into contact with hot surfaces.

Warning of electrical voltage
Take care not to come into contact with electrical voltage.

Allow the capacitors of the inverter to discharge (2 minutes).

Warning notice text:

WARNING!
An electric shock can be fatal. Before opening the device, ensure that the input and output sides are de-energized and disconnected.

How information is presented in the document

The conventions regarding how information is presented in the document, which are set out below, have been defined in order to increase the readability and comprehensibility of the document.

Application notes

IMPORTANT! Indicates application notes and other useful information. It does not indicate a harmful or dangerous situation.

Software

Software functions and elements of a graphical user interface (e.g., buttons, menu items) are highlighted in the text with this **mark up**.

Example: Click **Save**.

Instructions for action

1 Action steps are displayed with consecutive numbering.

✓ *This symbol indicates the result of the action step or the entire instruction.*

Target group

This document provides detailed information and instructions to ensure that people can use the machine safely and efficiently.

The information is intended for the following groups of people:

- **Technical specialists:** People with appropriate qualifications and fundamental knowledge of electronics and mechanics. The activities of a technical specialist include installation, operation, maintenance, and service work.
- **User:** People that use the machine in daily operation and want to understand its basic functions.

Regardless of any qualifications, only perform the activities listed in this document.

The definition of professional qualifications and their applicability are subject to national law.

Data security

With regard to data security, the user is responsible for:

- Backing up any changes made to the factory settings
- Saving and storing personal settings

NOTE

Data security for network and Internet connection
Unsecured networks and a lack of safeguards can result in data loss and unauthorized access. Observe the following points for safe operation:

- Operate inverters and system components on a private, secure network. A WiFi network is considered secure if security standard WPA 2 is satisfied as a minimum.
- Keep the network devices (e.g., WiFi routers) up to date with the latest technology.
- Keep the software and/or firmware updated.
- Use a wired network to ensure a stable data connection.
- For security reasons, do not make inverters and system components accessible from the Internet via port forwarding or Port Address Translation (PAT).
- Use the solutions provided by Fronius for monitoring and remote configuration.
- The optional communication protocol Modbus TCP/IP[1)] is an unsecured interface. Only use Modbus TCP/IP if no other secured data communication protocol (MQTT[2)]) is possible (e.g., compatibility with older Smart Meters).

[1)] TCP/IP - Transmission Control Protocol/Internet Protocol
[2)] MQTT - Message Queuing Telemetry Protocol

Privacy policy

When you connect your device (and any associated devices) to the internet, the following device and operating data (device ID/identifier, device IP address, device time, configuration settings, hardware and software information, device status log files, serial number) is sent automatically to

Fronius International GmbH, Froniusstraße 1, 4643 Pettenbach, Austria, telephone +43(0) 7242241-0, email: contact@fronius.com (controller)

and stored.

The processing of this device and operating data is carried out for the purpose of ensuring the operational safety of the device (time synchronization, provision of updates). This processing is therefore necessary for the functionality of the device and thus for the fulfillment of the contract (Art. 6 (1) (b) GDPR).

If you do not wish to have such data processed, you must manually disable the device's internet connection.

In addition, the device and operating data is also processed for the purpose of providing services as part of a supplementary digital service for your device (such as solar.web or similar) as soon as you have registered your device with such a digital service (identification). This data is processed to provide the requested digital services and is therefore necessary for the fulfillment of the contract (Art. 6 (1) (b) GDPR).

Furthermore, this data processing is also carried out for maintenance and support purposes and for handling customer concerns as well as in warranty and guarantee cases (only in individual cases and given connection between device and internet). In this context, the device and operating data may also be passed on to our cooperation partners (third-party providers and suppliers). The processing of this data is necessary for maintenance and support purposes or for processing warranty and guarantee cases and thus for the fulfillment of the contract (Art. 6 (1) (b) GDPR).

Device and operating data are also processed for analysis and diagnostic purposes in order to gain insights into the functionality of the devices and improve them accordingly. This data processing is based on our legitimate interest (Art. 6 (1) (f) GDPR).

We store this data for as long as it is necessary to fulfill the existing contract with you. Any storage beyond this is carried out for legal reasons or if we have a legitimate interest in doing so. For more information on data processing for the solar.web-digital service, as well as our general privacy policy and your rights as a data subject, please visit https://www.fronius.com.

Copyright

Fronius International GmbH retains the copyrights of these operating instructions.

Text, illustrations, and other media correspond to the technical state of the art at the time of publication. Fronius reserves the right to make changes. If you have any suggestions for improvement or have found a mistake in this document, we would be most grateful for your comments.

Fronius Verto

Device concept

The inverter transforms the direct current generated by the solar modules into alternating current. This alternating current is fed into the public grid and synchronized with the mains voltage in use.

The inverter is intended for use in grid-connected photovoltaic systems.

The inverter automatically monitors the public grid. Whenever conditions in the electric grid are inconsistent with standard conditions (for example, grid switch-off, interruption), the inverter will immediately stop producing power and interrupt the supply of power into the grid.
The grid is monitored by monitoring the voltage, frequency, and islanding conditions.

After installation and commissioning, the inverter's operation is fully automatic; the inverter draws the maximum possible power from the PV modules.
Depending on the operating point, this power is used in the home or fed into the grid.

When its temperature gets too high, the inverter automatically reduces the output power or switches off completely, in order to protect itself.
Reasons for the temperature being too high include a high ambient temperature or insufficient heat dissipation (for example, inadequate heat dissipation when installed in switch cabinets).

Scope of supply

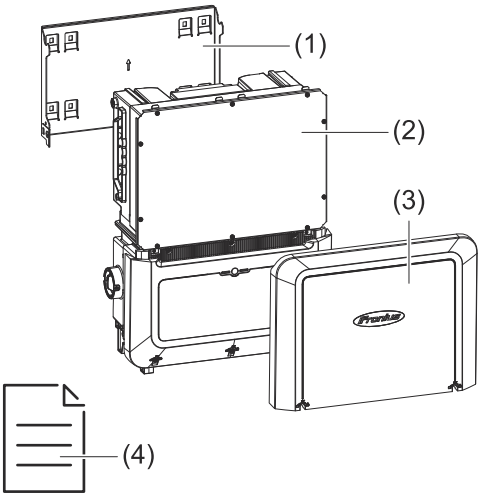

(1) Mounting bracket (is mounted on the inverter on delivery)
(2) Inverter
(3) Housing cover
(4) Quick Start Guide

Thermal concept

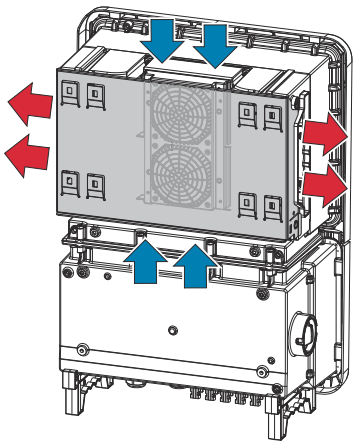

Ambient air is drawn in at the top and bottom of the device by the fan and blown out at the sides. The even heat dissipation allows several inverters to be installed next to each another.

NOTE

Risk due to insufficient cooling of the inverter.
This may result in a loss of power in the inverter.

- ▶ Do not block the fan (e.g., with objects that protrude through the touch guard).
- ▶ Do not cover the ventilation slots, even partially.
- ▶ Make sure that the ambient air can always flow through the inverter's ventilation slots unimpeded.

Fronius Solar.web

System owners and installers can easily monitor and analyze the PV system using Fronius Solar.web or Fronius Solar.web Premium. With the appropriate configuration, the inverter transmits data such as power, yield, load, and energy balance to Fronius Solar.web. More detailed information can be found at Solar.web - Monitoring & analysis.

Configuration is carried out via the Setup wizard, see chapter Installation with the app or Installation with the browser.

Requirements for configuration:

- Internet connection (download: min. 512 kbit/s, upload: min. 256 kbit/s)*.
- User account at solarweb.com.
- Completed configuration using the Setup wizard.

* These specifications do not provide an absolute guarantee of flawless operation. High error rates in the transmission, fluctuating receptions or misfires can have an adverse effect on data transfer. Fronius recommends on-site testing to ensure that the connections meet the minimum requirements.

Local communication

The inverter can be found via the Multicast DNS (mDNS) protocol. We recommend searching for the inverter using the assigned host name.

The following data can be called up via mDNS:

- NominalPower
- Systemname
- DeviceSerialNumber
- SoftwareBundleVersion

Utilization in accordance with "intended purpose"

Intended use

The inverter is designed to convert direct current from PV modules into alternating current and feed this power into the public grid.

Intended use also means:
- Carefully reading and following all the instructions as well as complying with the safety and danger notices in the operating instructions
- Installation in accordance with the chapter headed "Installation", from page 31

Follow all grid operator regulations regarding energy fed into the grid and connection methods.

Foreseeable misuse

The following circumstances are considered to be reasonably foreseeable misuse:
- Any use that is not the intended use or goes beyond the intended use.
- Alterations to the inverter that are not expressly recommended by Fronius.
- Installation of components that are not expressly recommended or sold by Fronius.

Provisions for the photovoltaic system

The inverter is designed exclusively to be connected and used with PV modules. Use with other DC generators (e.g., wind generators) is not permitted.

When configuring the photovoltaic system, make sure that all photovoltaic system components are operating exclusively within their permitted operating range.

All measures recommended by the PV module manufacturer for maintaining the PV module properties must be followed.

Surge protection device (SPD)

Surge protection device SPD

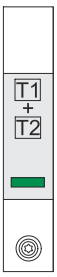

The surge protection device (SPD) protects against temporary overvoltages and diverts surge currents (e.g., lightning strike). Based on an overall lightning protection concept, the SPD contributes to the protection of the photovoltaic system components.

If the surge protection device is triggered, the color of the indicator changes from green to red (mechanical display).

A triggered SPD must be replaced with a fully functional SPD immediately by an authorized specialist company in order to maintain the full protective function of the device.

It is possible to enable the option of digitally displaying the triggering of an SPD. If you wish to set this function, refer to the PDF "SPD Triggering / Temporary SPD Triggering" in the Service & Support area at www.fronius.com

IMPORTANT!
After setting the function described above, the inverter also responds if the 2-pole signal cable of the surge protection device is damaged or is subject to an interruption.

The following components can be used to replace existing AC SPDs with type 1+2 products:
- CITEL - DAC1-13S-31-275 (for mains voltages of 380–400 V)
- CITEL - DAC1-13S-31-320 (for mains voltages of 440–480 V)

Note: Replacing a device does not automatically result in replacement of the existing SPDs.

Operating controls and connections

Connection area

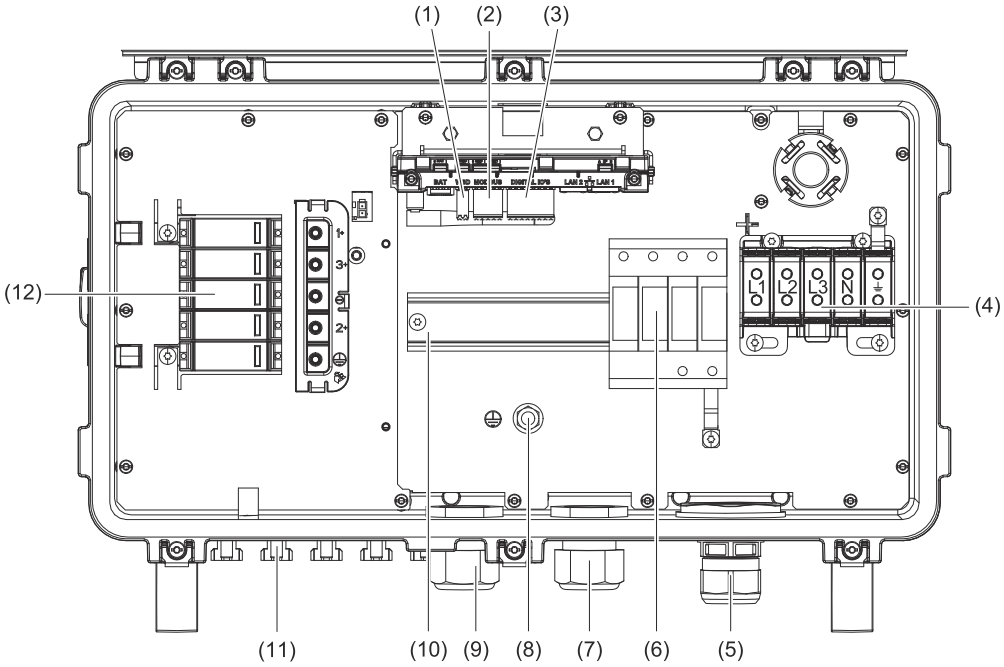

(1) Push-in WSD (wired shutdown) terminal
(2) Push-in terminals in the data communication area (Modbus)
(3) Push-in terminals in the data communication area (digital inputs and outputs)
(4) 5-pin AC terminal
⏚ = ⏚
(5) Cable bushing/cable gland AC
(6) AC SPD (surge protection device)
(7) Optional cable bushing
(8) Grounding clamping bolts
(9) Cable bushing/cable gland in the data communication area
(10) DIN rail (mounting option for third-party components)
(11) DC connections MC4
(12) DC SPD (surge protection device)

PV connections

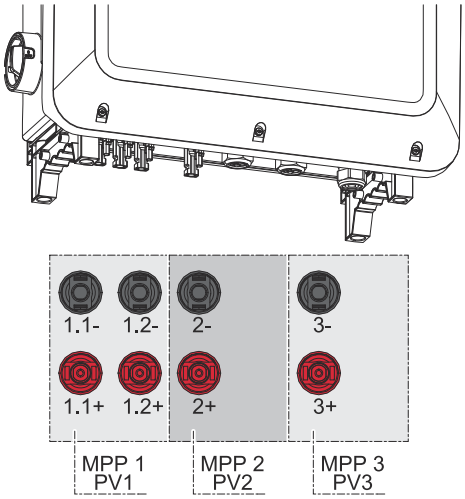

Ground electrode bolt

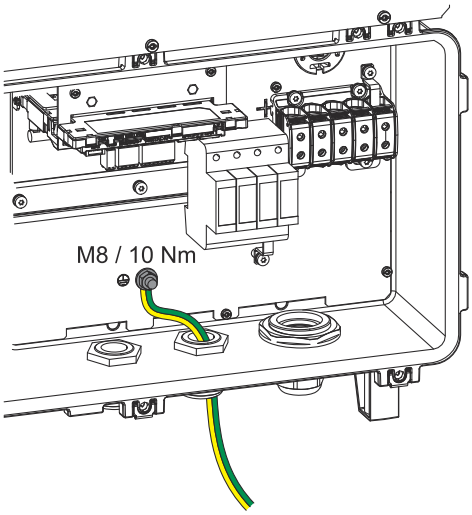

The ground electrode bolt ⏚ allows additional components to be grounded, such as:

- AC cable
- Module mounting system
- Ground rod

If further grounding options are required, suitable terminals can be fitted to the DIN rail.

Installation option for third-party components

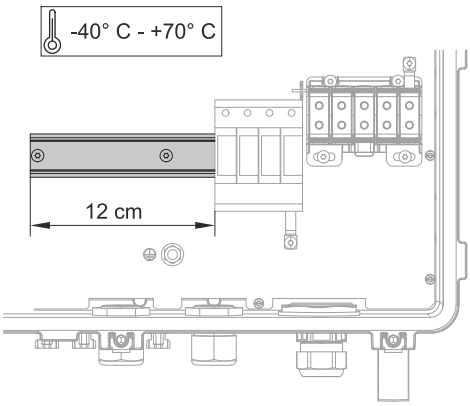

There is space for the installation of third-party components in the connection area. Components up to a maximum width of 12 cm (6 transport units) can be mounted on the DIN rail. The components must have a temperature resistance of -40 °C to +70 °C.

DC disconnector

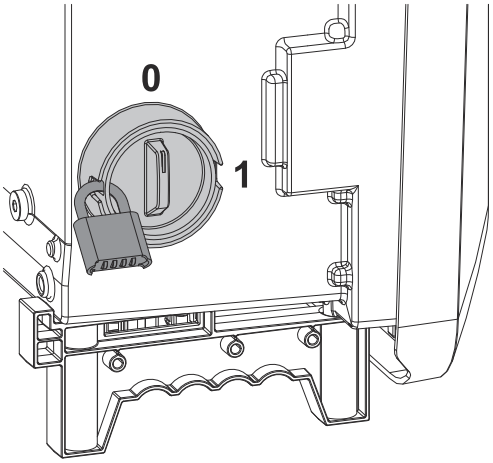

The DC disconnector has 2 switch settings: 1 (On) / 0 (Off).

Protection against unintentional switching on:
When the switch is in the 0 (Off) position, a conventional padlock can be used to secure the inverter against being switched on. The national guidelines must be complied with in this respect.

Padlock minimum requirement:
- Shackle diameter min. 6 mm
- Housing size min. 40 mm

Data communication area

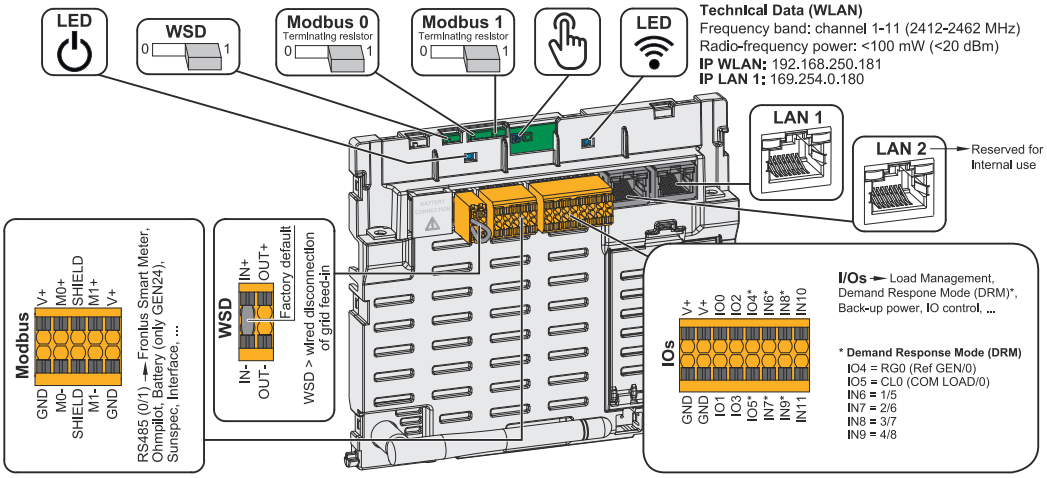

⏻ Operating LED	Indicates the inverter operating status.
WSD (wired shutdown) switch	Defines the inverter as the WSD master or WSD slave. **Position 1:** WSD master **Position 0:** WSD slave
Modbus 0 (MB0) switch	Switches the terminating resistor for Modbus 0 (MB0) on/off. **Position 1:** Terminating resistor on (factory setting) **Position 0:** Terminating resistor off
Modbus 1 (MB1) switch	Switches the terminating resistor for Modbus 1 (MB1) on/off. **Position 1:** Terminating resistor on (factory setting) **Position 0:** Terminating resistor off

Optical sensor	For operating the inverter. See chapter Button functions and LED status indicator on page 27.
Communications LED	Indicates the inverter connection status.
LAN 1	Ethernet connection for data communication (e.g., WiFi router, home network or, for commissioning with a laptop, see chapter Installation with the browser on page 58).
LAN 2	Reserved for future functions. To avoid malfunctions, only use LAN 1.
I/O terminal	Push-in terminal for digital inputs/outputs. See chapter Permitted cables for the data communication connection on page 41. The designations (RG0, CL0, 1/5, 2/6, 3/7, 4/8) relate to the Demand Response Mode function, see chapter Functions and I/Os on page 64.
WSD terminal	Push-in terminal for the WSD installation. See chapter WSD (wired shutdown) on page 13.
Modbus terminal	Push-in terminal for the installation of Modbus 0, Modbus 1, 12 V, and GND (ground). The data connection to the connected components is established via the Modbus terminal. **The inputs M0 and M1 can be freely selected.** Max. 4 Modbus participants per input; see chapter Modbus participants on page 52.

Button functions and LED status indicator

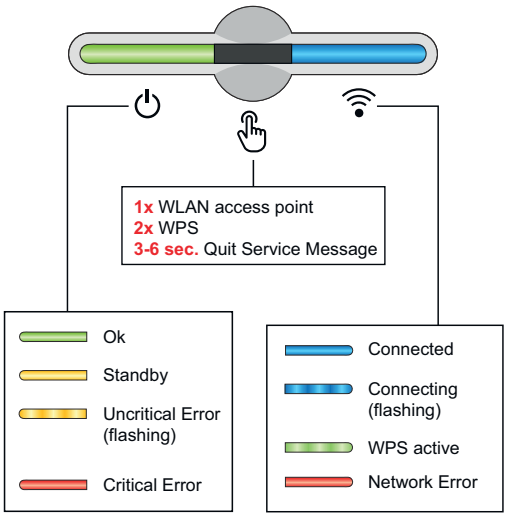

The operating status LED displays the status of the inverter. In case of faults, follow the individual steps in the Fronius Solar.web live app.

The optical sensor is actuated by touching it with a finger.

The communications LED displays the connection status. To establish a connection, follow the individual steps in the Fronius Solar.web live app.

Sensor functions	
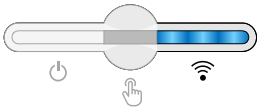	1x = WLAN access point (AP) is opened. Flashes blue
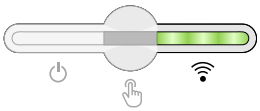	2x = WLAN protected setup (WPS) is activated. Flashes green
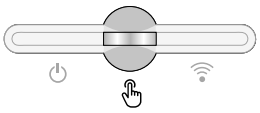	3 seconds (max. 6 seconds) = The service message disappears. Flashes white (quickly)

LED status indicator	
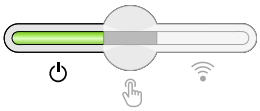	The inverter is operating correctly. Lights up green
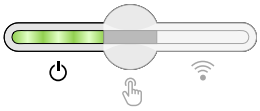	The inverter is starting. Flashes green
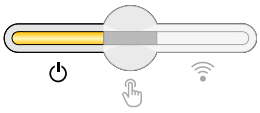	The inverter is on standby, is not operating (e.g., no energy fed into the grid at night), or is not configured. Lights up yellow
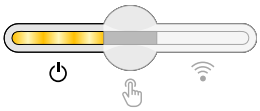	The inverter displays a non-critical status. Flashes yellow
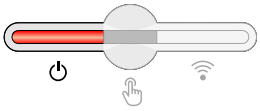	The inverter displays a critical status and no energy is fed into the grid. Lights up red
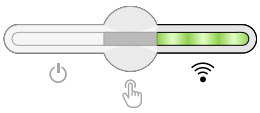	The network connection is being established via WPS. 2x= WPS search mode. Flashes green
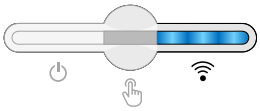	The network connection is being established via WLAN AP. 1x= WLAN AP search mode (active for 30 minutes). Flashes blue
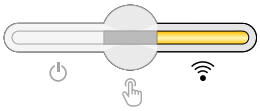	The network connection is not configured. Lights up yellow
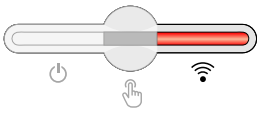	A network error is displayed, the inverter is operating correctly. Lights up red

LED status indicator	
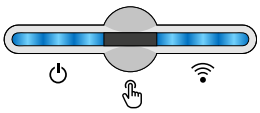	The inverter is performing an update. ⏻ / 📶 Flash blue
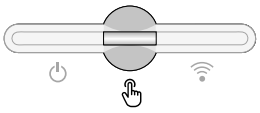	There is a service message. Lights up white

Schematic internal wiring of IOs

The V+/ GND pin provides the possibility of feeding in a voltage in the range of 12.5 to 24 V (+ max. 20%) using an external power supply unit. Outputs IO 0 - 5 can then be operated using the external voltage that has been fed in. A maximum of 1 A may be drawn per output, whereby a total of max. 3 A is permitted. The fuse protection must take place externally.

⚠ CAUTION

Danger from polarity reversal at the terminals due to improper connection of external power supply units.
This may result in severe damage to the inverter.
- ▶ Check the polarity of the external power supply unit with a suitable measuring device before connecting it.
- ▶ Connect the cables to the V+/GND outputs while ensuring the correct polarity.

IMPORTANT!
If the total output (6 W) is exceeded, the inverter switches off the entire external power supply.

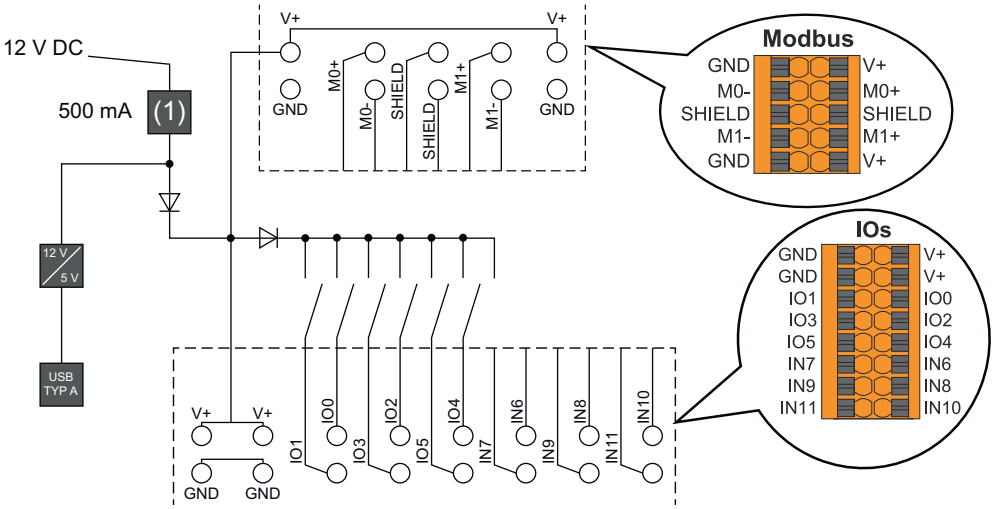

(1) Current limitation

Installation

General

Tools required

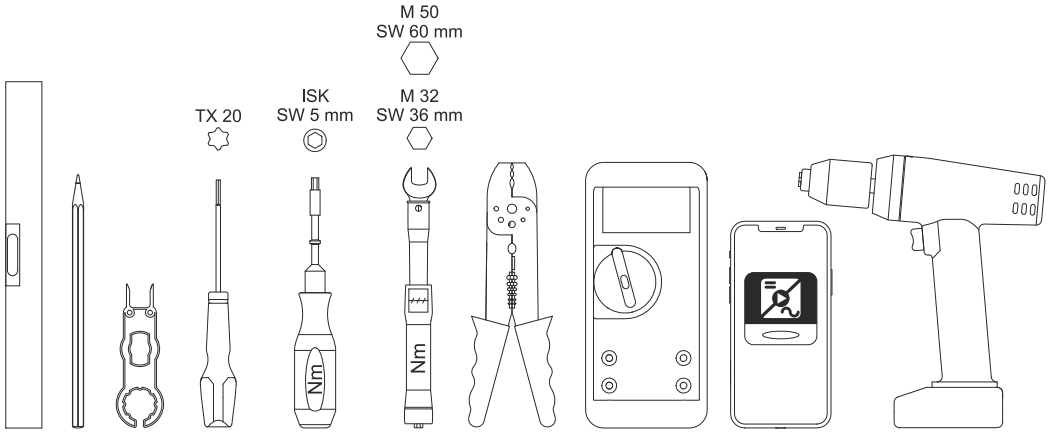

- Spirit level
- Pencil
- TX20 screwdriver
- Hex socket torque wrench 5 mm
- Torque wrench M32, M50
- Wire stripper for cables and wires
- Multimeter for measuring voltage
- Smartphone, tablet, or PC for setting up the inverter
- Drill driver

Quick-fastener system

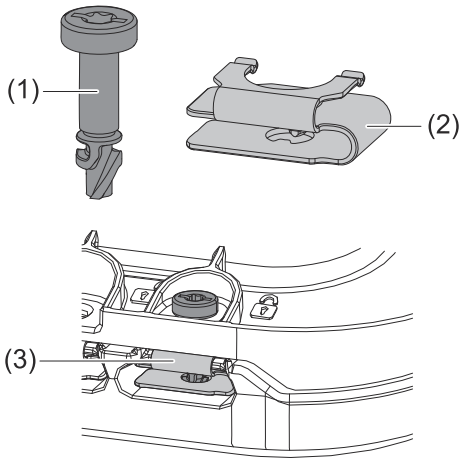

Captive screws (1) are used on the housing for fitting or removing the connection area cover. To fit the connection area cover, rotate the screws by half a turn (180°) into the quick-fastener spring (2).

Close the quick-fastener system (3) using a screwdriver (TX20) and a torque of 0.5-5 Nm.

NOTE

Danger when using a drill driver.
This may result in the destruction of the quick-fastener system due to over-torque.

▶ Use a screwdriver (TX20).

▶ Do not turn the screws more than 180°.

System component compatibility

All installed components in the PV system must be compatible with each other and have the necessary configuration options. The installed components must not restrict or negatively affect the functioning of the PV system.

NOTE

Risk due to components in the PV system that are not and/or only partially compatible.
Incompatible components can restrict and/or negatively affect the operation and/or functioning of the PV system.

- ▶ Only install components recommended by the manufacturer in the PV system.
- ▶ Before installation, check the compatibility of components that have not been expressly recommended with the manufacturer.

Installation location and position

Choosing the location of the inverter

Please observe the following criteria when choosing a location for the inverter:

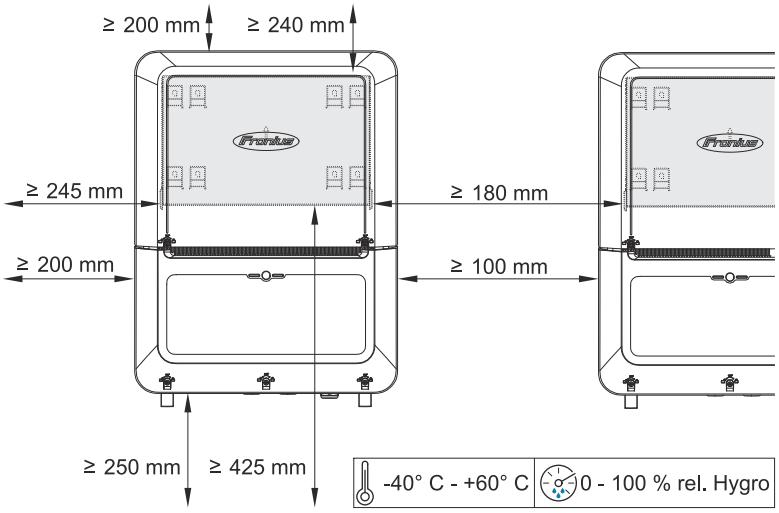

Only install on a solid, non-flammable surface.
When installing the inverter in a switch cabinet or similar closed environment, ensure adequate heat dissipation by forced-air ventilation.
When installing the inverter on the outer walls of cattle sheds, it is important to maintain a minimum clearance of 2 m between all sides of the inverter and the ventilation and building openings.
The following substrates are allowed: - Wall installation: Corrugated sheet metal (mounting rails), brick, concrete, or other non-flammable surfaces sufficiently capable of bearing loads - Mast or beam: Mounting rails, behind the PV modules directly on the PV mounting system - Flat roof (if this is for a film roof, make sure that the films comply with the fire protection requirements and are not highly flammable. Ensure compliance with the national provisions.) - Covered parking lot roof (no overhead installation)

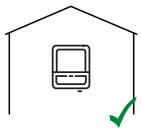	The inverter is suitable for indoor installation.
	The inverter is suitable for outdoor installation. Due to its IP 66 protection class, the inverter is not susceptible to water spray from any direction.
	Do not expose the inverter to direct sunlight in order to keep inverter heating as low as possible.

The inverter should be installed in a protected location, e.g., near the PV modules or under an overhanging roof.

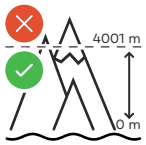

The inverter must not be installed or operated at more than 4 000 m above sea level.

The voltage U_{DCmax} must not exceed the following values:

- **Verto 10.0 - 12.5 208-240, Verto 15.0 - 20.0**
  - between 0 and 3000 m: 1000 V
  - between 2901 and 3500 m: 950 V
  - between 3501 and 4000 m: 891 V
  - over 4001: not allowed
- **Verto 24.0 - 25.0 400, Verto 25.0 480**
  - between 0 and 2100 m: 1000 V
  - between 2101 and 3500 m: 863 V
  - between 3501 and 4000 m: 811 V
  - over 4001: not allowed

Do not install the inverter:

- Where it may be exposed to ammonia, corrosive gases, acids or salts (e.g., fertilizer storage areas, vent openings for livestock stables, chemical plants, tanneries, etc.)

During certain operating phases the inverter may produce a slight noise. For this reason it should not be installed in an occupied living area.

Do not install the inverter in:

- Areas where there is an increased risk of accidents from farm animals (horses, cattle, sheep, pigs, etc.)
- Stables or adjoining areas
- Storage areas for hay, straw, chaff, animal feed, fertilizers, etc.

The inverter is designed to be dust-proof (IP 66). In areas of high dust accumulation, dust deposits may collect on the cooling surfaces, and thus impair the thermal performance. In this case, cleaning is required regularly. We therefore recommend not installing the inverter in areas and environments with high dust accumulation.

Do not install the inverter in:

- Greenhouses
- Storage or processing areas for fruit, vegetables, or viticulture products
- Areas used in the preparation of grain, green fodder, or animal feeds

Choosing the location of third-party batteries

IMPORTANT!
Refer to the manufacturer's documents for specifications regarding the suitable location of third-party batteries.

Installation position of inverter		The inverter is suitable for vertical installation on a vertical wall or column. Do not install the inverter: - At an angle - In the horizontal position - With the connection sockets facing upwards - On a base
	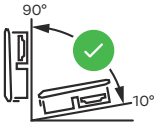	The inverter is suitable for a horizontal installation position or for installation on a sloping surface. Do not install the inverter: - On a sloping surface with the connection sockets facing upwards - Overhanging with the connection sockets facing down - On the ceiling

Installing the mounting bracket and attaching the inverter

Selecting the mounting material

Use the corresponding fixing materials depending on the subsurface and observe the screw dimension recommendations for the mounting bracket.
The installer is responsible for selecting the right type of fixing.

Properties of the mounting bracket

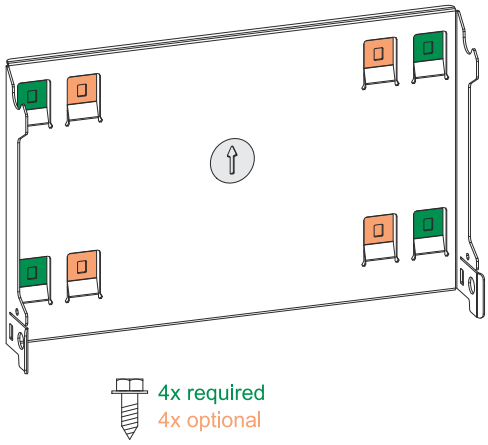

The mounting bracket (illustration) can also be used as a guide.

The pre-drilled holes on the mounting bracket are intended for screws with a thread diameter of 6-8 mm (0.24-0.32 inches).

Unevenness on the installation surface (for example, coarse-grained plaster) is largely counterbalanced by the mounting bracket.

The mounting bracket must be fixed to the four outer tabs (marked in green). The four inner tabs (marked in orange) can be used in addition if required.

Do not deform the mounting bracket

NOTE

When attaching the mounting bracket to the wall or to a column, make sure that the mounting bracket is not deformed.
A deformed mounting bracket may make it difficult to clip/swivel the inverter into position.

Fitting the mounting bracket to a wall

IMPORTANT!
When installing the mounting bracket, make sure that it is installed with the arrow pointing upwards.

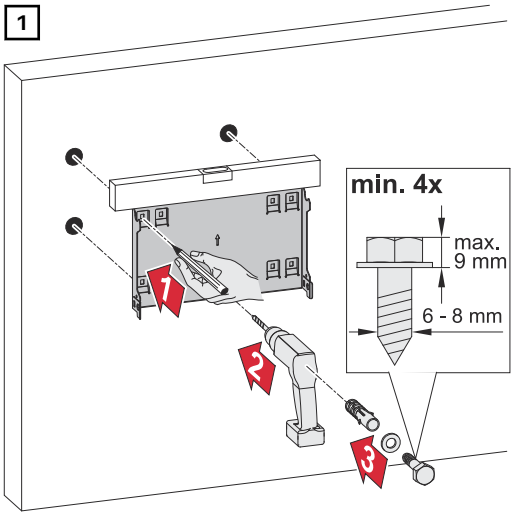

Attaching the inverter to the mounting bracket

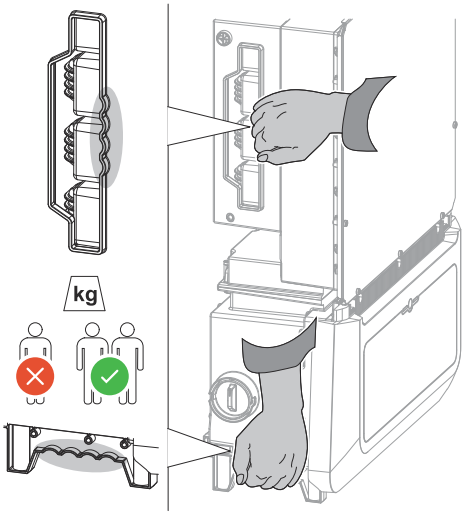

There are integrated grips on the side of the inverter which facilitate lifting/attaching.

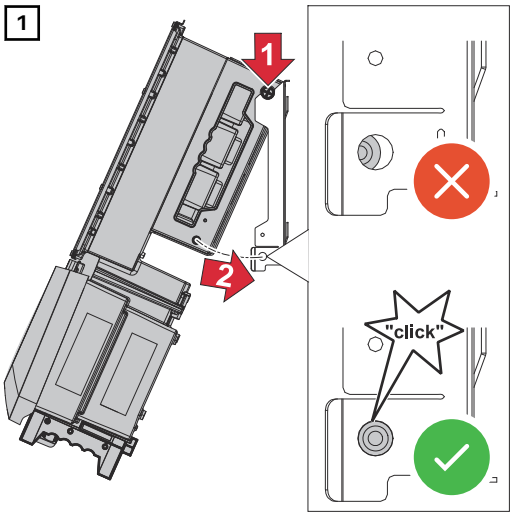

Clip the inverter into the mounting bracket from above. The connections must point downwards.

Push the lower part of the inverter into the snap-in tabs of the mounting bracket until the inverter audibly clicks into place on both sides.

Check that the inverter is correctly positioned on both sides.

Requirements for connecting the inverter

Connecting aluminum cables

Aluminum cables can also be connected to the AC connections.

> ***NOTE***
>
> **When using aluminum cables:**
> - ▶ Follow all national and international guidelines regarding the connection of aluminum cables.
> - ▶ Grease aluminum wires with appropriate grease to protect them from oxidation.
> - ▶ Follow the instructions of the cable manufacturer.

Different cable types

Solid	Fine-stranded	Fine-stranded with ferrule and collar	Fine-stranded with ferrule without collar	Sectoral
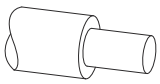	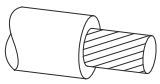	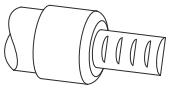	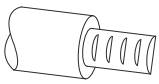	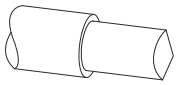

Permitted cables for the electrical grid connection

Round copper or aluminum conductors with a cross-section of 4 to 35 mm^2 can be connected to the terminals of the inverter as described below.

The torques according to the following table must be observed:

Cross-section	Copper		Aluminum	
	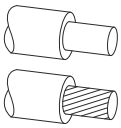	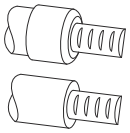	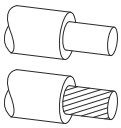	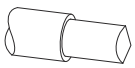
35 mm^2	10 Nm	10 Nm	14 Nm	14 Nm
25 mm^2	8 Nm	8 Nm	12 Nm	10 Nm
16 mm^2			10 Nm	
10 mm^2	6 Nm	6 Nm	✕	✕
6 mm^2				
4 mm^2	✕			

The grounding must be established with a 6 mm^2 copper or 16 mm^2 aluminum cable as a minimum requirement.

Permitted cables for the electrical DC connection

Round copper conductors with a cross section of **4-10 mm^2** can be connected to the MC4 plugs of the inverter.

Select a sufficiently large cable cross-section based on the actual device output and the installation situation! Observe the data sheet for the plug!

Permitted cables for the data communication connection

Connect round copper conductors to the terminals of the inverter as described below.

IMPORTANT!
If several single conductors are connected to an input of the terminal, connect the single conductors with a corresponding ferrule.

WSD connections						
Distance	Stripping length	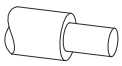	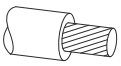	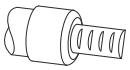	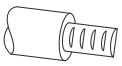	Cable recommendation
100 m 109 yd	10 mm 0.39 inches	0.14 - 1.5 mm^2 AWG 26 - 16	0.14 - 1.5 mm^2 AWG 26 - 16	0.14 - 1 mm^2 AWG 26 - 18	0.14 - 1.5 mm^2 AWG 26 - 16	Min. CAT 5 UTP (unshielded twisted pair)

Modbus connections						
Distance	Stripping length	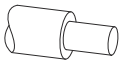	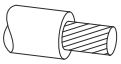	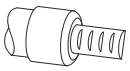	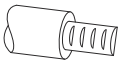	Cable recommendation
300 m 328 yd	10 mm 0.39 inches	0.14 - 1.5 mm^2 AWG 26 - 16	0.14 - 1.5 mm^2 AWG 26 - 16	0.14 - 1 mm^2 AWG 26 - 18	0.14 - 1.5 mm^2 AWG 26 - 16	Min. CAT 5 STP (shielded twisted pair)

IO connections						
Distance	Stripping length	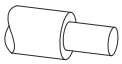	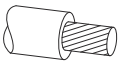	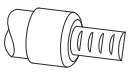	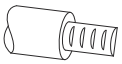	Cable recommendation
30 m 32 yd	10 mm 0.39 inches	0.14 - 1.5 mm^2 AWG 26 - 16	0.14 - 1.5 mm^2 AWG 26 - 16	0.14 - 1 mm^2 AWG 26 - 18	0.14 - 1.5 mm^2 AWG 26 - 16	Single conductors possible

LAN connections
Fronius recommends using at least CAT 5 STP (shielded twisted pair) cables and a maximum distance of 100 m (109 yd).

Cable diameter of the AC cable

For a standard M32 cable gland **with a large reducer (green)**:
Cable diameter from **12-14 mm**

For a standard M32 cable gland **with a small reducer (red)**:
Cable diameter from **17-19 mm**

For a standard M32 cable gland **without a reducer**:
Cable diameter from **20.5-24.5 mm**

For an M50 cable gland:
Cable diameter from **≤35 mm**

Maximum alternating current fuse protection

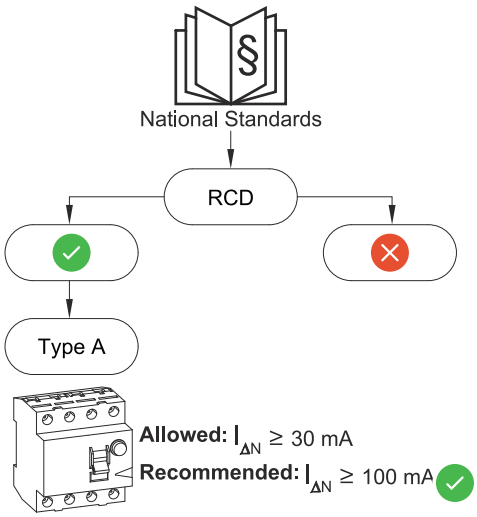

A residual current circuit breaker for the AC connecting cable may be required depending on national regulations, the grid operator, and other conditions.
A type A residual current circuit breaker is generally sufficient in this case. Nevertheless, false alarms can be triggered for the type A residual current circuit breaker in individual cases and depending on local conditions. For this reason, Fronius recommends using a residual current circuit breaker suitable for frequency inverters with a release current of at least 100 mA, taking into account national provisions.

Verto	AC power	Recommended fuse protection	Max. fuse protection
15.0	15 kW	32 A	63 A
17.5	17,5 kW	40 A	63 A
20.0	20 kW	40 A	63 A
24.0	24 kW	50 A	63 A
25.0 400	25 kW	50 A	63 A

Connecting the inverter to the public grid (AC side)

Safety

⚠ **WARNING**

Danger from incorrect operation and work that is not carried out properly.
This can result in severe personal injury and damage to property.
- ▶ Read the Installation Instructions and Operating Instructions before installing and commissioning the equipment.
- ▶ Only qualified personnel are authorized to commission the inverter and only within the scope of the respective technical regulations.

⚠ **WARNING**

Danger from grid voltage and DC voltage from PV modules that are exposed to light.
An electric shock can be fatal.
- ▶ Prior to any connection work, ensure that the inverter is de-energized on the AC side and the DC side.
- ▶ Only an authorized electrical engineer is permitted to connect this equipment to the public grid.

⚠ **WARNING**

Danger from damaged and/or contaminated terminals.
This can result in severe personal injury and damage to property.
- ▶ Prior to connection work, check the terminals for damage and contamination.
- ▶ Remove any contamination while the equipment is de-energized.
- ▶ Have defective terminals replaced by an authorized specialist.

Connecting the inverter to the public grid (AC side)

It is not possible to operate the inverter in ungrounded networks, e.g., IT networks (isolated networks without ground conductor).

In certain system configurations, it is not necessary to connect the neutral conductor. In this system configuration, the **neutral conductor status** parameter must be set to **Not connected** on the web interface of the inverter in the **Device configuration** > **Inverter** > **AC grid** menu.

1

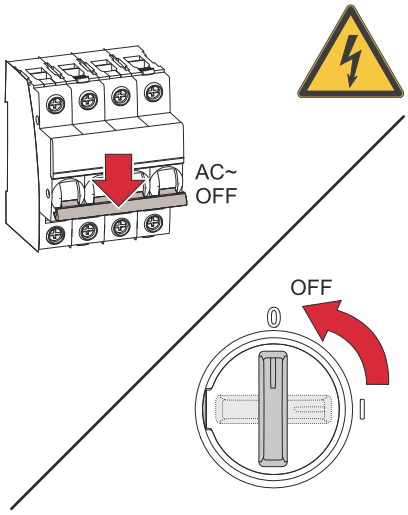

Switch off the external automatic circuit breakers (AC and battery).
Make sure that the DC disconnector (see DC disconnector) is set to the "Off" switch position.

2

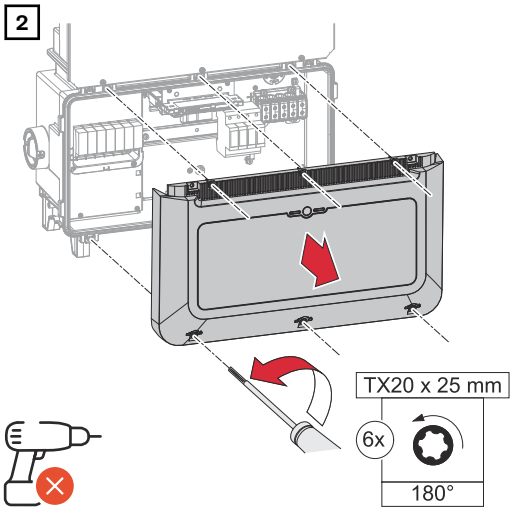

Loosen the 6 screws on the connection area cover by rotating them 180° to the left using a screwdriver (TX20).
Remove the connection area cover from the device.

3

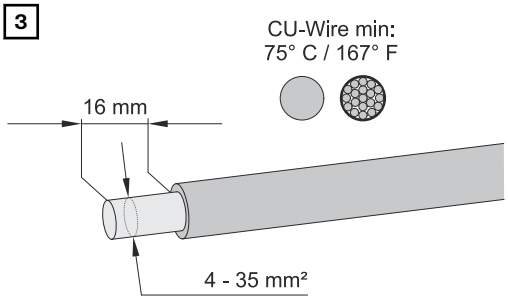

Strip the insulation of the single conductors by 16 mm.
Select the cable cross-section in accordance with the instructions in Permitted cables for the electrical grid connection from page 40.

IMPORTANT!
Only one conductor may be connected to each pin. With a twin ferrule, two conductors can be connected to one pin.

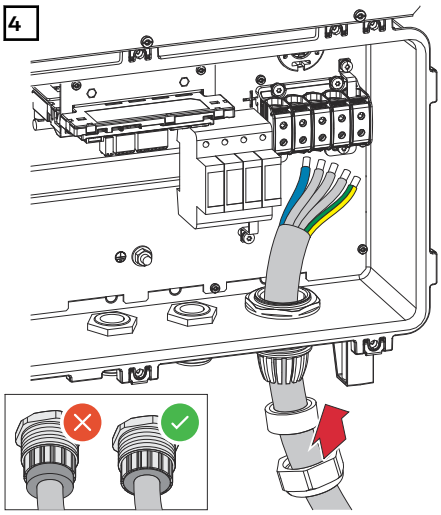

Connection with neutral conductor

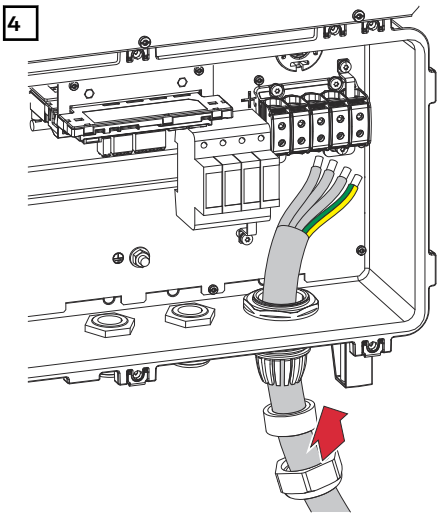

Connection without neutral conductor

For more information about the cable gland, see chapter Cable diameter of the AC cable on page 41.

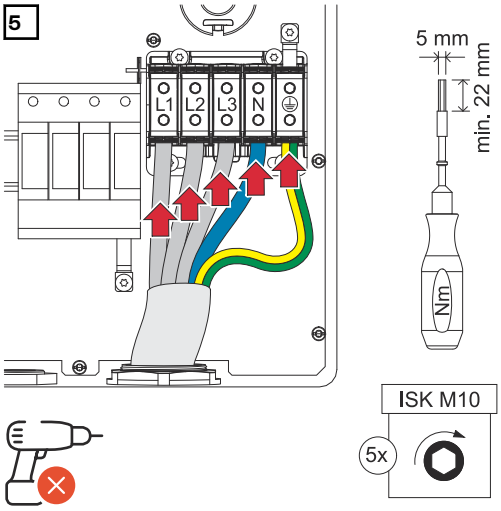

Connection with neutral conductor

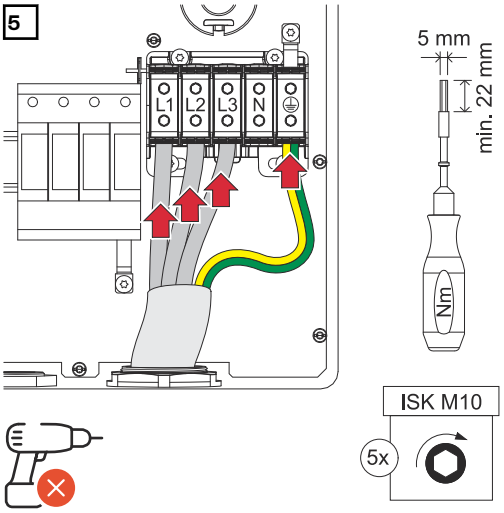

Connection without neutral conductor

IMPORTANT! Observe torques – see Permitted cables for the electrical grid connection on page 40.

IMPORTANT!
The ground conductor must be dimensioned longer and laid with a movement loop so that it is last loaded in the event of a failure of the cable gland.

L1	Phase conductor
L2	Phase conductor
L3	Phase conductor
N	Neutral conductor (optional)
PE	Ground conductor

6

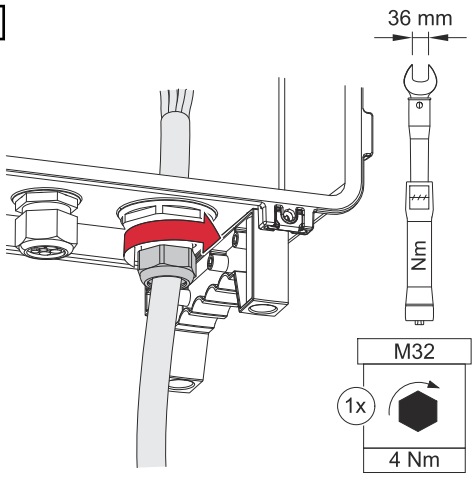

Fasten the union nut of the cable gland with a torque of 4 Nm.

Connecting the inverter to the public grid with the PEN conductor (AC side)

It is not possible to operate the inverter in ungrounded networks, e.g., IT networks (isolated networks without ground conductor).

1

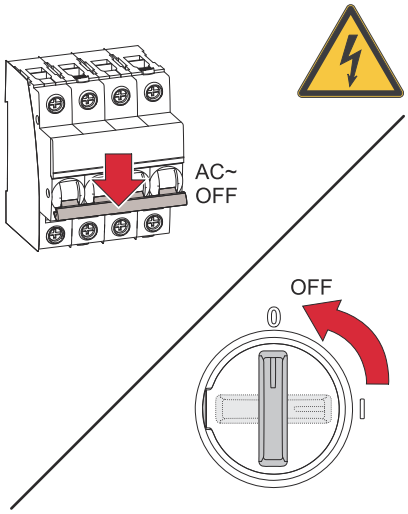

Switch off the external automatic circuit breakers (AC and battery).
Make sure that the DC disconnector (see DC disconnector) is set to the "Off" switch position.

2

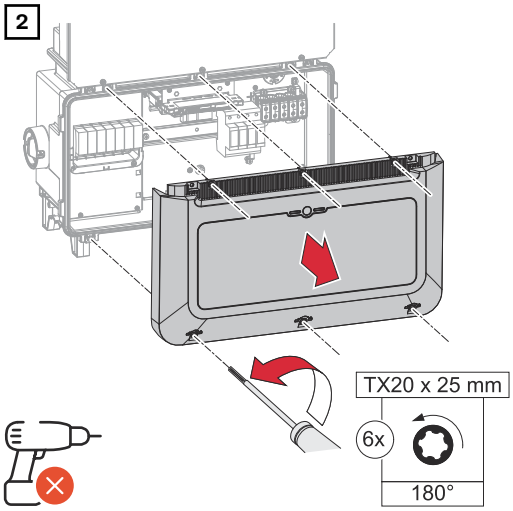

Loosen the 6 screws on the connection area cover by rotating them 180° to the left using a screwdriver (TX20).
Remove the connection area cover from the device.

3

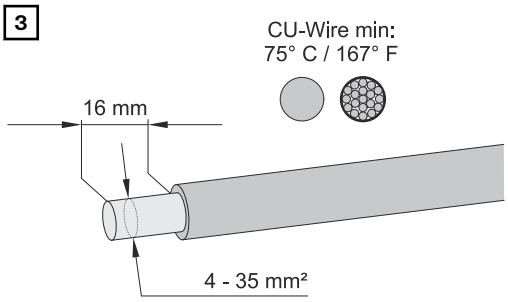

Strip the insulation of the single conductors by 16 mm.
Select the cable cross-section in accordance with the instructions in Permitted cables for the electrical grid connection from page 40.

IMPORTANT!
Only one conductor may be connected to each pin. With a twin ferrule, two conductors can be connected to one pin.

4

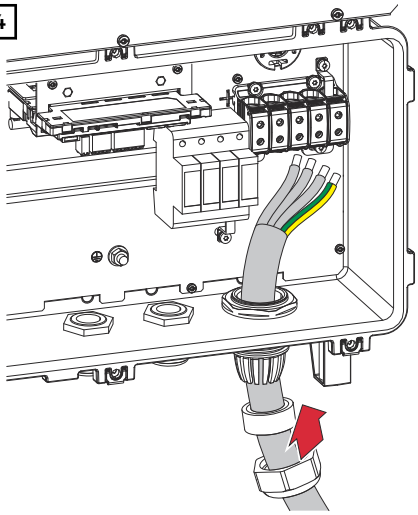

For more information about the cable gland, see chapter Cable diameter of the AC cable on page 41.

The PEN conductor must have ends that are permanently marked blue, according to the national regulations.

Dimension the ground conductor longer and lay it with a movement loop so that it is last loaded in the event of a failure of the cable gland.

5

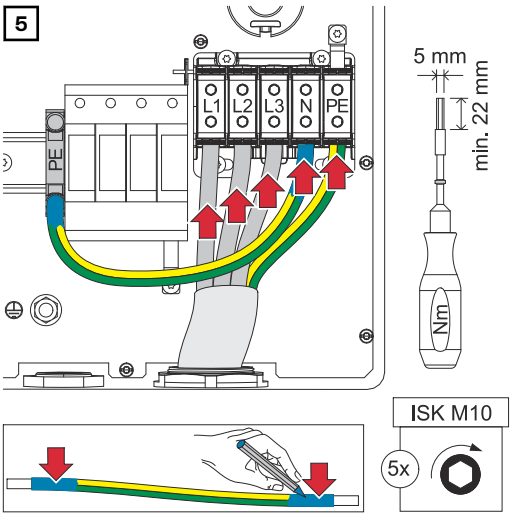

PEN conductor version: Terminal on DIN rail

Observe torques – see Permitted cables for the electrical grid connection on page 40.

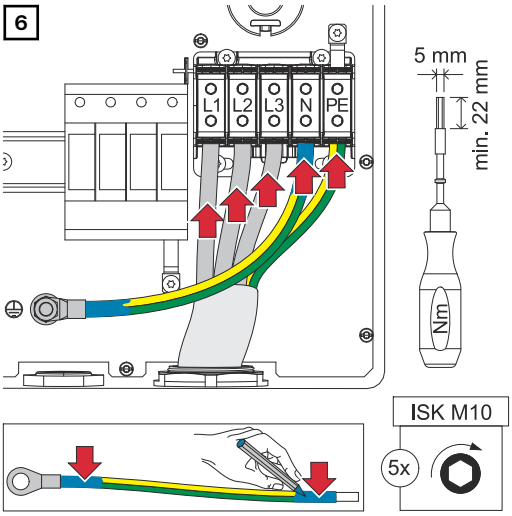

PEN conductor version: Grounding bolt

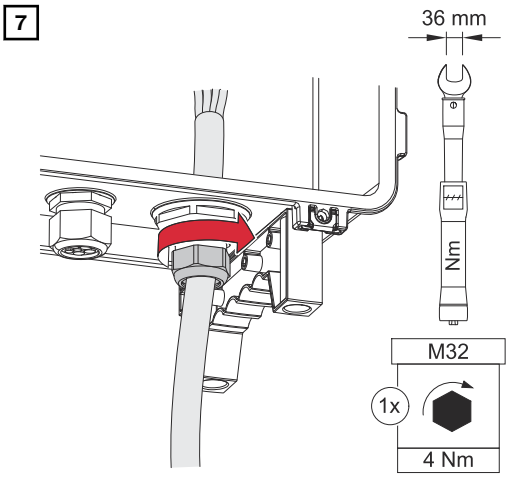

Fasten the union nut of the cable gland with a torque of 4 Nm.

Replacing the PG screw joint

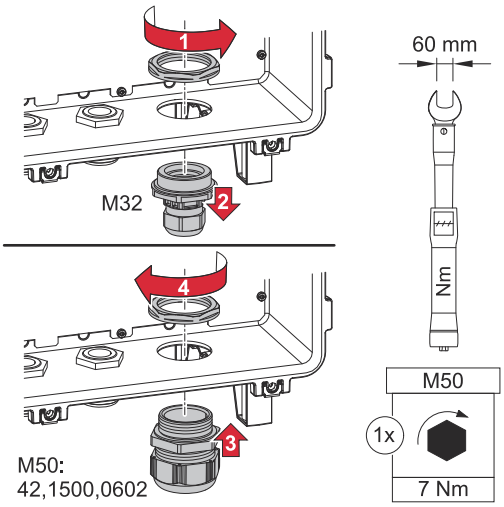

Connecting solar module strings to the inverter

General information about PV modules

To enable suitable PV modules to be chosen and to use the inverter as efficiently as possible, it is important to bear the following points in mind:

- If insolation is constant and the temperature is falling, the open circuit voltage of the PV modules will increase. The open circuit voltage must not exceed the max. permissible system voltage. An open circuit voltage above the indicated values will damage the inverter, and all warranty rights will become null and void.
- The temperature coefficients on the data sheet of the PV modules must be observed.
- Exact values for sizing the PV modules can be obtained using suitable calculation tools, such as the Fronius Solar.creator.

IMPORTANT!
Before connecting up the PV modules, check that the voltage for the PV modules specified by the manufacturer corresponds to the actual measured voltage.

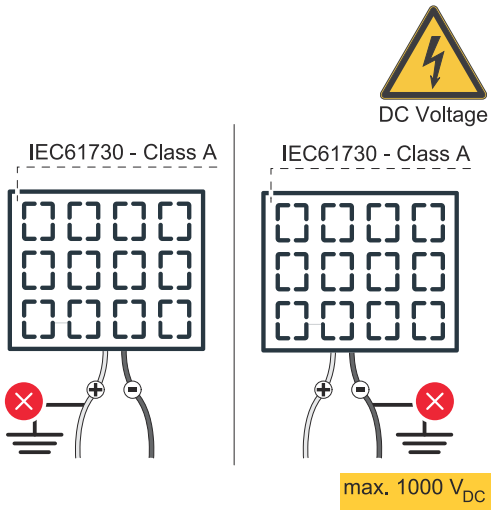

IMPORTANT!
The PV modules connected to the inverter must comply with the IEC 61730 Class A standard.

IMPORTANT!
Solar module strings must not be grounded.

Safety

WARNING

Danger from incorrect operation and work that is not carried out properly.
This can result in severe personal injury and damage to property.

- ▶ The commissioning, maintenance, and service work in the inverter's power stage set may only be carried out by Fronius-trained service personnel in accordance with the technical specifications.
- ▶ Read the installation instructions and operating instructions before installing and commissioning the equipment.

WARNING

Danger from mains voltage and DC voltage from PV modules that are exposed to light.
This can result in severe personal injury and damage to property.
- ▶ All connection, maintenance, and service work should only be carried out when the AC and DC sides have been disconnected from the inverter and are de-energized.
- ▶ Only an authorized electrical engineer is permitted to connect this equipment to the public grid.

WARNING

Danger of an electric shock due to improperly connected terminals/PV plug connectors.
An electric shock can be fatal.
- ▶ When connecting, ensure that each pole of a string is routed via the same PV input, e.g.:
  + pole string 1 to the input **PV 1.1+** and **- pole string 1** to the input **PV 1.1-**

WARNING

Danger from damaged and/or contaminated terminals.
This can result in severe personal injury and damage to property.
- ▶ Prior to connection work, check the terminals for damage and contamination.
- ▶ Remove any contamination while the equipment is de-energized.
- ▶ Have defective terminals replaced by an authorized specialist company.

PV Generator, general

Several independent PV inputs are available. These inputs can be connected to a number of different modules.

When starting for the first time, set up the PV Generator in accordance with the respective configuration (can also be carried out at a later date in the **System configuration** menu field under menu item **Components**).

Connecting solar module strings to the inverter

1

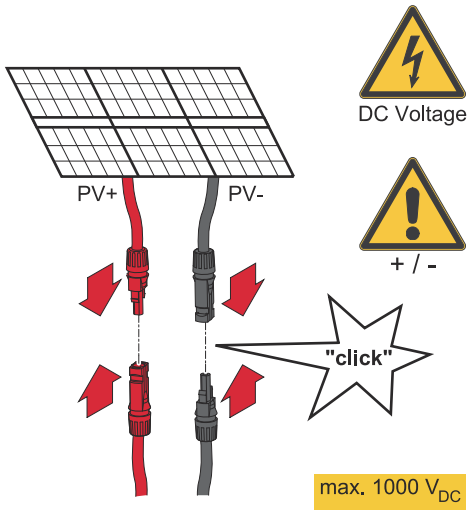

2

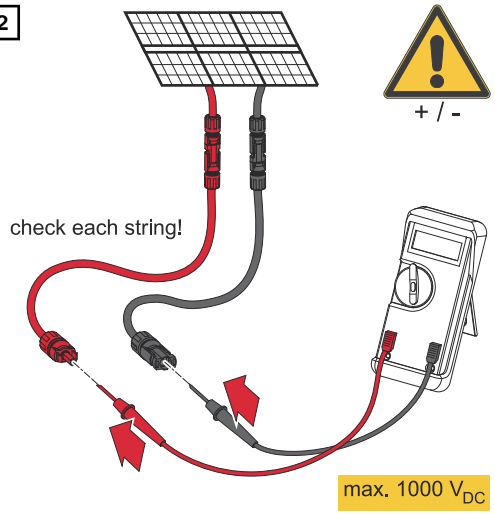

Use a suitable measuring instrument to check the voltage and polarity of the DC cabling.

⚠ CAUTION

Danger due to polarity reversal at the terminals.
This may result in severe damage to the inverter.

- ▶ Use a suitable measuring instrument to check the polarity of the DC cabling.
- ▶ Use a suitable measuring instrument to check the voltage (**max. 1 000 V_{DC}**)

⚠ CAUTION

Risk of damage due to incompatible plug connectors.
Incompatible plug connectors can cause thermal damage and may cause a fire.

- ▶ Only use the original plug connectors (MC4) from Stäubli (formerly Multi-Contact).

3

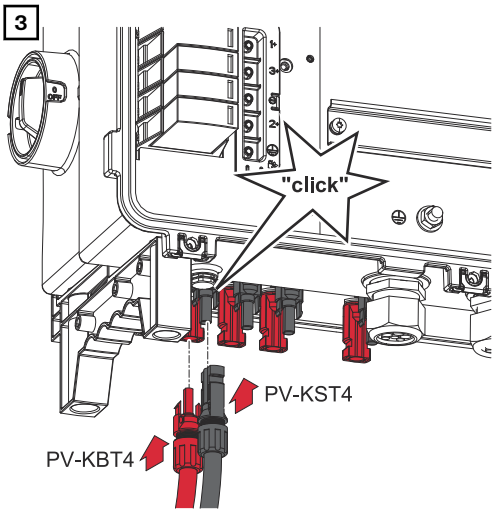

Connect PV cables from the solar modules to the MC4 plugs according to the label

Unused MC4 plugs on the inverter must be closed by the cover caps supplied with the inverter.

Connecting the data communication cables

Modbus participants

The Modbus inputs M0 and M1 can be freely selected. A maximum of four Modbus participants can be connected to the Modbus terminal on the Modbus inputs M0 and M1.

IMPORTANT! Only one primary meter, one battery storage system, and one Ohmpilot/Ohmpilot Eco can be connected per inverter. Secondary meters can only be configured if a primary meter is defined in the system.

Due to the high volume of data transferred, some system components require more than one participant on the Modbus input:

System component	Required participants
Primary meter/secondary meter	1
Ohmpilot	1
Ohmpilot Eco	2
Battery storage	2

Possible combination of system components per Modbus input M0/M1

	Required Modbus participants		
Number of different system components	per battery storage system	per heating solution	available Modbus inputs*
3 meters	0	0	1
1 battery storage system	2	0	2
1 Ohmpilot	0	1	3
1 Ohmpilot Eco	0	2	2
1 battery storage system + 1 Ohmpilot	2	1	1
1 battery storage system + 1 Ohmpilot Eco	2	2	0

** Connect one primary meter per inverter to either M0 or M1 and take it into account when assigning participants.*

If the **Inverter Control via Modbus** function is enabled in the **Communication** > **Modbus** menu area, no Modbus participants can be connected. The inverter can either be controlled via Modbus or query system components via Modbus. If both are necessary, use both Modbus inputs.

Modbus variants

Modbus 0	Modbus 1	Description
System components	System components	System components are connected to both Modbus inputs.
System components	Modbus RTU	System components with inverter control unit, see Modbus

Modbus 0	Modbus 1	Description
Modbus RTU	System components	System components with inverter control unit, see Modbus

Routing data communication cables

IMPORTANT!
If data communication cables are wired into the inverter, observe the following points:

- Depending on the number and cross-section of the wired data communication cables, remove the corresponding blanking plugs from the sealing insert and insert the data communication cables.
- Make sure that you insert the corresponding blanking plugs into any free openings on the sealing insert.

IMPORTANT!
Ingress protection rating IP 66 cannot be ensured if blanking plugs are missing or incorrectly inserted.

1

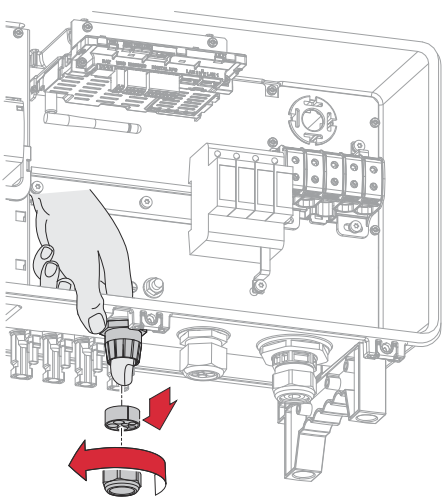

Remove the union nut on the cable gland and press the sealing ring with the blanking plugs out from the inside of the device.

2

3x Ø 4,9 - 5,5 mm (.193 - .217 inch)
3x Ø 6,7 - 8,5 mm (.264 - .335 inch)

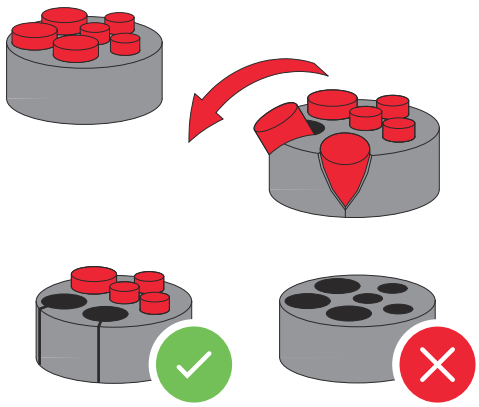

Open up the sealing ring at the location where the blanking plugs are to be removed.

***** Remove the blanking plugs with a sideways motion.

3

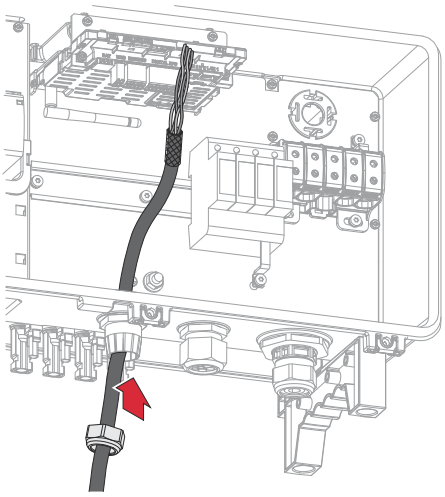

First, guide the data cables through the union nut of the cable gland and then through the housing opening.

4

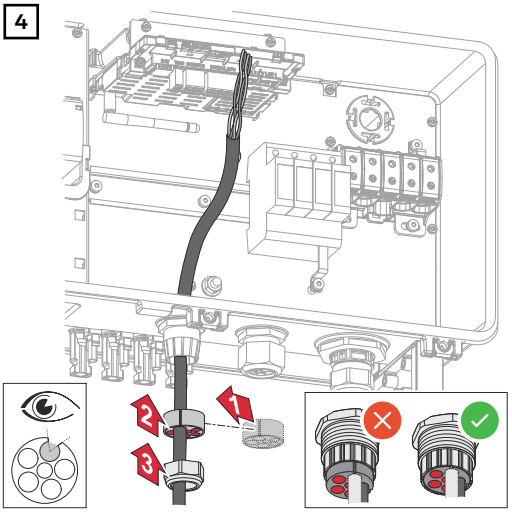

Insert the sealing ring between the union nut and the housing opening. Press the data cables into the seal's cable guide. Then press in the seal until it reaches the underside of the cable gland.

5

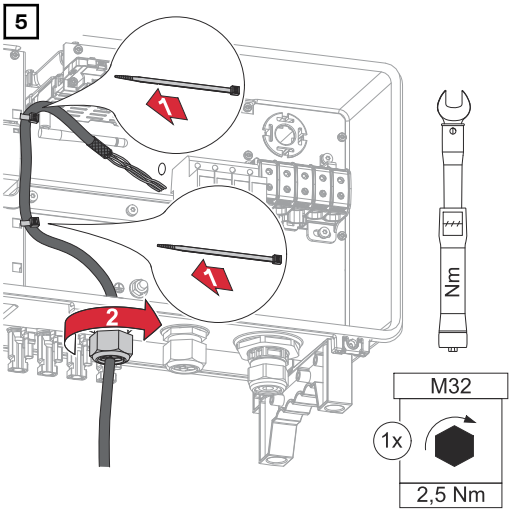

Using a cable tie, attach the data cables to the protective cover of the DC surge protection device (SPD). Fasten the union nut of the cable gland with a torque of min. 2.5 - max. 4 Nm.

Installing the WSD (wired shutdown)

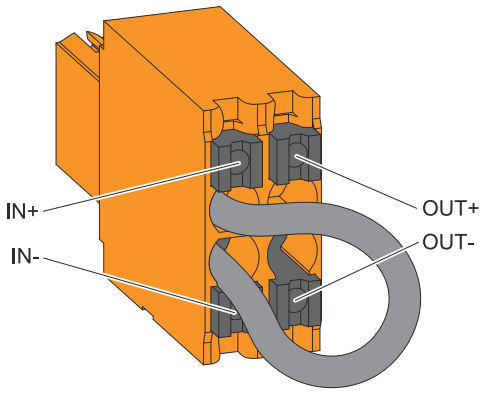

IMPORTANT!
The push-in WSD terminal in the inverter's connection area is delivered with a bypass ex works as standard. The bypass must be removed when installing a trigger device or a WSD chain.

The WSD switch of the first inverter with connected trigger device in the WSD chain must be in position 1 (master). The WSD switch of all other inverters should be in position 0 (secondary device).

Max. distance between 2 devices: 100 m
Max. Number of devices: 28

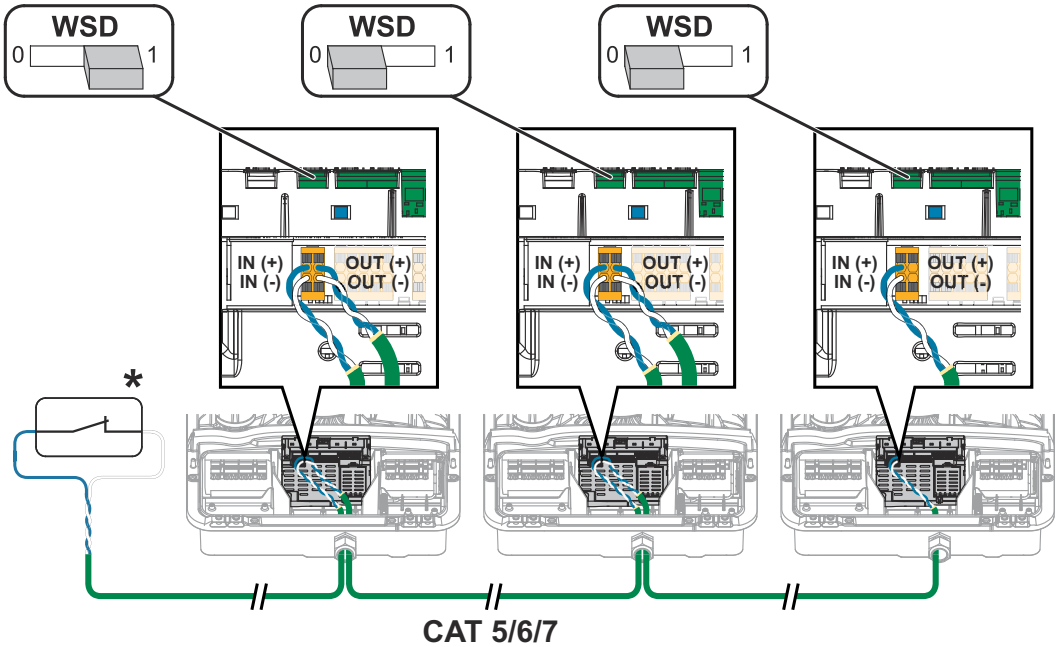

* Floating contact of the trigger device (e.g., central grid and system protection). If several floating contacts are used in a WSD chain, these must be connected in series.

Closing and commissioning the inverter

Closing the inverter's connection area/housing cover, and commissioning

1

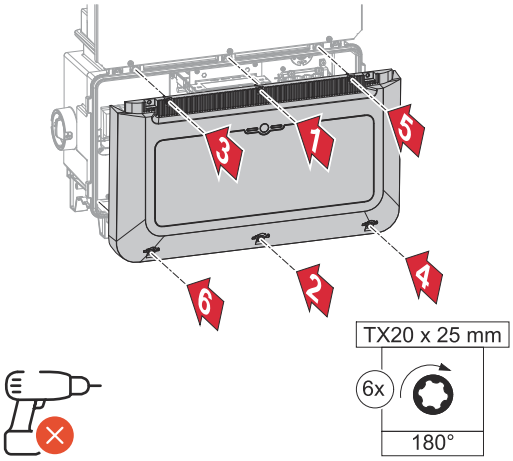

Place the cover on the connection area. Tighten six screws by rotating them 180° to the right using a screwdriver (TX20).

2

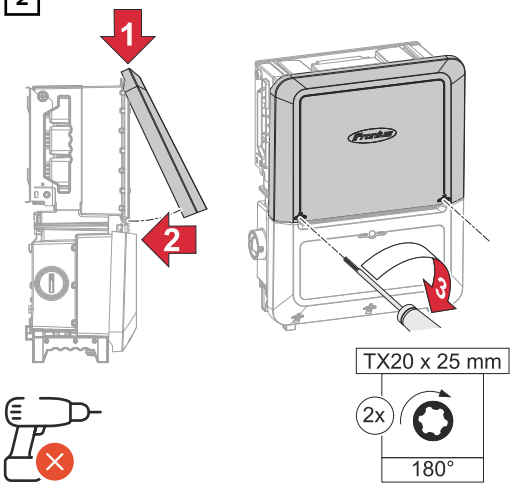

Clip the housing cover into the inverter from above.
Press on the lower part of the housing cover and tighten the 2 screws by rotating them 180° to the right using a screwdriver (TX20).

3

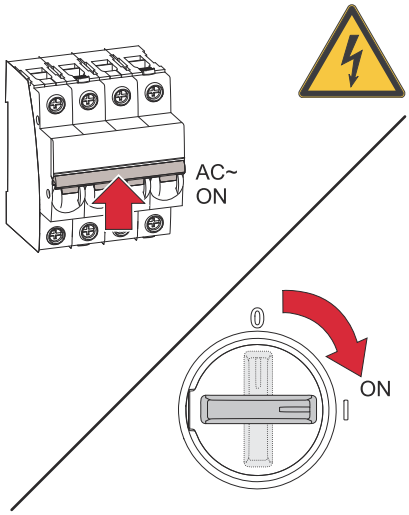

Turn the DC disconnector (see DC disconnector) to the "On" switch setting.
Switch on the external automatic circuit breakers (AC and battery).

4 Open the WiFi access point, see chapter Button functions and LED status indicator on page 27

Starting the inverter for the first time

When starting the inverter for the first time, various setup settings must be configured.

If the setup is canceled before completion, the input data is not saved and the start screen with the installation wizard is shown once again. The data is saved in the event of an interruption, e.g., a power failure. Commissioning is continued at the point at which the interruption occurred after the power supply is restored. If the setup was interrupted, the inverter feeds energy into the grid at maximum 500 W and the operating status LED flashes yellow.

The country setup can only be set when starting the inverter for the first time. If the country setup needs to be changed at a later date, contact your installer/ technical support.

Installation with the app

The Fronius Solar.start app is required for installation. Depending on the mobile device used to perform the installation, the app is available on the relevant platform.

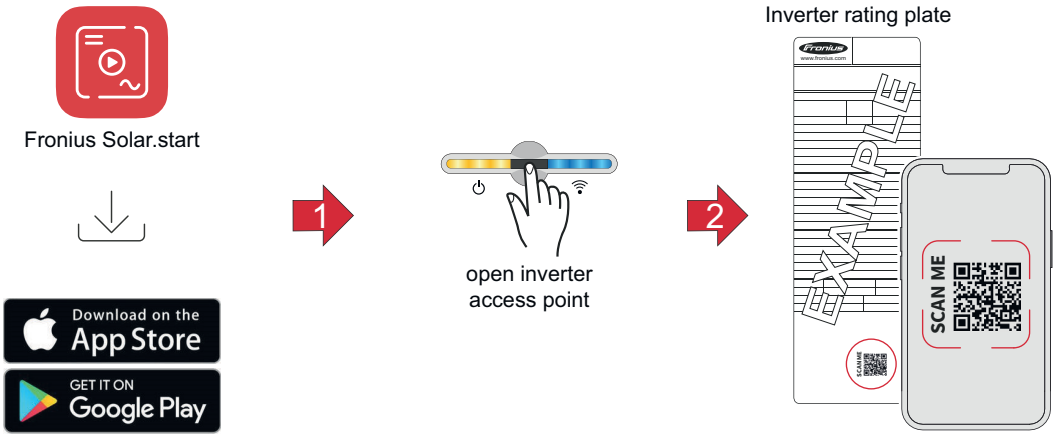

1. Download and install the Fronius Solar.start app.
2. Open the access point by touching the sensor.
   ✓ *Communication LED flashes blue.*
3. Open the Fronius Solar.start app and follow the installation wizard. Scan the QR code on the rating plate with a smartphone or tablet to connect to the inverter.
4. Add system components in Fronius Solar.web and commission the PV system.

The network wizard and product setup can be performed independently. A network connection is required for the Fronius Solar.web installation wizard.

Installation with the browser

The network wizard and product setup can be performed independently. A network connection is required for the Fronius Solar.web installation wizard.

WiFi:

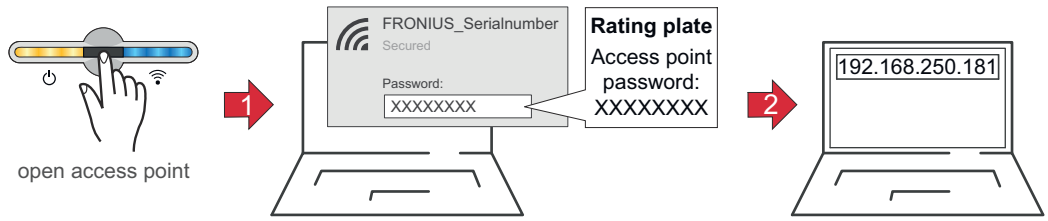

1 Open the access point by touching the sensor ☝.

✓ *Communication LED flashes blue.*

2 Establish the connection to the inverter in the network settings (the inverter is displayed with the name "FRONIUS_" and the serial number of the device).

3 Enter the password from the rating plate and confirm.
IMPORTANT!
To enter the password, first select the **Connect using a security key instead** link in order to establish the connection with the password.

4 Enter the IP address 192.168.250.181 in the address bar of the browser and confirm. The installation wizard opens.

5 Follow the installation wizard and complete the installation in the individual areas.

6 Add the system components in Fronius Solar.web and commission the PV system.

Ethernet:

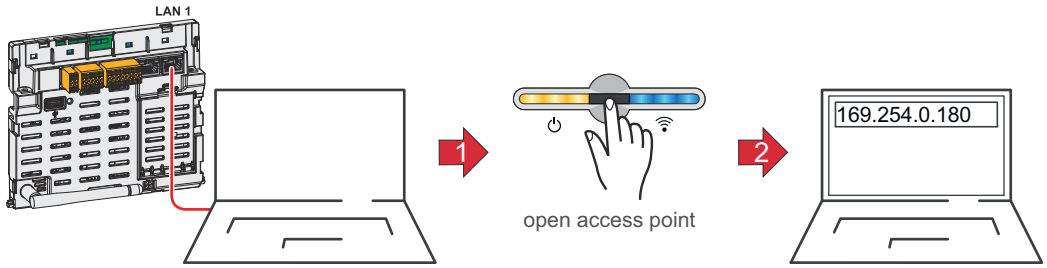

1 Establish a connection to the inverter (LAN1) using a network cable (min. CAT5 STP).

2 Open the access point by touching the sensor once ☝.

✓ *Communication LED flashes blue.*

3 Enter the IP address 169.254.0.180 in the address bar of the browser and confirm. The installation wizard opens.

4 Follow the installation wizard and complete the installation in the individual areas.

5 Add the system components in Fronius Solar.web and commission the PV system.

De-energizing the inverter and switching it back on

Risk of rupture

WARNING

In the case of electrical devices with a high housing protection class, there is a risk of explosion in the event of a fault. Possible causes are defective components that release gases, improperly installed or commissioned devices, or the penetration of gas via lines (conduits).
This may result in serious personal injury and damage to property.

- ▶ Turn off the automatic circuit breaker
- ▶ If possible, switch off the DC line in front of the inverter (additional external DC disconnector)
- ▶ Turn the DC disconnector to the "OFF" switch setting
- ▶ Remove the connection area cover
- ▶ Allow the capacitors of the inverter to discharge (2 minutes)

De-energizing the inverter and switching it back on

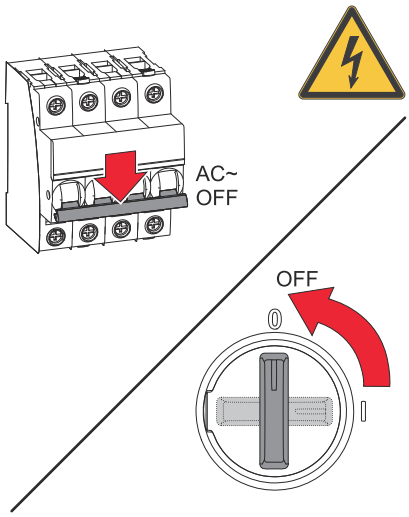

Disconnecting the inverter from the power supply:

1. Switch off the automatic circuit breaker (AC and, if present, battery).
2. Turn the DC disconnector to the "Off" switch setting.

IMPORTANT!
Wait for the capacitors of the inverter to discharge!

Switching on the inverter:
If the inverter has not been in operation for six months or more after installation, it must be tested before commissioning.

1. Turn the DC disconnector to the "On" switch setting.
2. Switch on the automatic circuit breaker (AC and, if present, battery).

Settings – User interface of the inverter

User settings

User login

1. Open the user interface of the inverter in the browser.
2. In the **Login** menu area, log in with username and password, or, in the **User** > **User Login** menu area, log in with username and password.

IMPORTANT!
Depending on the authorization of the user, settings can be made in the individual menu areas.

Selecting languages

1. In the **User** > **Language** menu area, select the desired language.

Device configuration

Components

All available components of the system can be added via **Add component+**.

PV Generator
Activate the MPP tracker and enter the connected PV output in the relevant field.

Primary meter
For problem-free operation with further energy producers, it is important to install the Fronius Smart Meter at the feed-in point. The inverter and further producers must be connected to the public grid via the Fronius Smart Meter.
This setting also has an effect on the behavior of the inverter during the night. If the function is deactivated, the inverter switches to standby mode as soon as there is no more PV power available. The inverter starts again as soon as sufficient PV power is available.
If the function is activated, the inverter remains permanently connected to the grid in order to draw energy from other producers at any time.
After connecting the meter, the position must be configured.
- **Modbus RTU**
- **Modbus TCP**
- **MQTT** (available **MQTT device** is displayed automatically)

> ***NOTE***
> For communication via MQTT, the inverter and Smart Meter must be in the same sub-network.

The following parameters must also be defined for the Smart Meter:
- **Application** (**Production meter** or **Secondary meter**)
- **Name**
- **Category** (e.g., **inverter**)
- **IP Address** (for Modbus TCP)
- **Port** (for Modbus TCP)
- **Modbus Address** (for Modbus RTU and TCP)

The Watt value for the production meter is the sum of all production meters.
The Watt value for the secondary meter is the sum of all secondary meters.

Ohmpilot
All the Ohmpilots available in the system are displayed. Select the desired Ohmpilot and add to the system via "Add."

Functions and I/Os

Load Management
Select up to four pins for the load management. Further settings for the load management are available in the **Load Management** menu item.
Default: Pin 1

Australia - Demand Response Modes (DRM)
Activate the slider if DRM is required. Configure the pins for control via DRM as follows:

Mode	Description	Information	DRM Pin	I/O pin
DRM0	Inverter disconnects from the grid	DRM0 occurs in the event of an interruption or short circuit on the REF GEN or COM LOAD lines, or in the event of invalid combinations of DRM1 - DRM8. The grid relays open.	REF GEN COM LOAD	IO4 IO5
DRM1	Import P_{nom} ≤ 0% without disconnection from grid	currently not supported	DRM 1/5	IN6
DRM2	Import P_{nom} ≤ 50%	currently not supported	DRM 2/6	IN7
DRM3	Import P_{nom} ≤ 75% & $+Q_{rel}$* ≥ 0%	currently not supported	DRM 3/7	IN8
DRM4	Import P_{nom} ≤ 100%	currently not supported	DRM 4/8	IN9
DRM5	Export P_{nom} ≤ 0% without disconnection from grid	currently not supported	DRM 1/5	IN6
DRM6	Export P_{nom} ≤ 50%	currently not supported	DRM 2/6	IN7
DRM7	Export P_{nom} ≤ 75% & $-Q_{rel}$* ≥ 0%	currently not supported	DRM 3/7	IN8
DRM8	Export P_{nom} ≤ 100%	currently not supported	DRM 4/8	IN9

The percentage specifications always relate to the rated device power.

IMPORTANT! If the **Australia - Demand Response Modes (DRM)** function is activated and no DRM control is connected, the inverter switches to standby mode.

Inverter

Force standby
When this function is activated, the supply of energy from the inverter into the grid is interrupted. This makes it possible to shut down the inverter without power and protect its components. The standby function is automatically deactivated when the inverter is restarted.

Fan test

IMPORTANT!
For settings in this menu item, select the **Technician** user, enter the password for the **Technician** user, and confirm. Settings may only be made by trained and qualified personnel!

This function can be used to check whether the fans of the inverter are working correctly based on acoustics, for example after replacing a fan.

1 Click **Start fan test**

✓ *The inverter successively activates all fans that are running at partial load during the test phase to avoid unnecessary noise. The inverter is in standby during this time.*

✓ *The test takes around 30 seconds per fan. The inverter then switches back to normal operation. The test can be stopped manually using the* **Stop fan test** *function.*

AC network

Parameter	Value range	Description
Neutral conductor status	Not connected	The neutral conductor is not required in the system configuration and is therefore not connected.
	Connected	The neutral conductor is connected.

PV 1 to **PV 4**

Parameter	Value range	Description
Mode	Off	The MPP tracker is deactivated.
	Auto	The inverter uses the voltage at which the max. possible output of the MPP tracker is possible.
	Fixed	The MPP tracker uses the voltage defined in **UDC fixed**.
UDC fixed	150-870 V	The inverter uses the fixed voltage that is used on the MPP tracker.
Dynamic Peak Manager	Off	Function is deactivated.
	On	The entire solar module string is checked for optimization potential and determines the best possible voltage for the supply of energy from the inverter into the grid.

Ripple control signal
Ripple control signals are signals that are sent by the energy company in order to switch controllable loads on and off. Depending on the installation situation, ripple control signals can be dampened or amplified by the inverter. This can be counteracted if necessary by applying the following settings.

Parameter	Value range	Description
Reduction of influence	Off	Function is deactivated.
	On	Function is activated.
Frequency of the ripple control signal	100-3,000 Hz	The frequency specified by the energy company must be entered here.
Grid inductance	0.00001-0.005 H	The value measured at the infeed point must be entered here.

Measures to prevent FI/RCMU false alarms
(when using a 30 mA residual current circuit breaker)

NOTE

A residual current circuit breaker for the AC connecting cable may be required depending on national regulations, the grid operator, and other conditions.
A type A residual current circuit breaker is generally sufficient in this case. Nevertheless, false alarms can be triggered for the type A residual current circuit breaker in individual cases and depending on local conditions. For this reason, Fronius recommends using a residual current circuit breaker suitable for frequency inverters with a release current of least 100 mA, taking into account national provisions.

Parameter	Value range	Description
Leakage current factor to reduce RCMU/FI false tripping	0-0.25 (default: 0.16)	By reducing the setting value, the leakage current is reduced and the intermediate circuit voltage is increased, which slightly lowers the efficiency. - A setting value of 0.16 ensures optimum efficiency. - A setting value of 0 enables minimum leakage currents.
Shutdown before 30 mA FI triggers	Off	The function for reducing false tripping of the residual current circuit breaker is deactivated.
	On	The function for reducing false tripping of the residual current circuit breaker is activated.
Rated non-tripping fault current limit value	0.015-0.3	Value of the non-tripping residual current specified by the manufacturer for the residual current circuit breaker at which the residual current circuit breaker does not switch off under specified conditions.

Insulation warning

Parameter	Value range	Description
Insulation warning	Off	The insulation warning is deactivated.
	On	The insulation warning is activated. A warning is output in the event of an insulation fault.
Insulation measurement mode	Exact	Insulation monitoring takes place with the highest degree of accuracy and the measured insulation resistance is displayed on the user interface of the inverter.
	Fast	Insulation monitoring takes place with a lesser degree of accuracy, whereby the time to take the insulation measurement is shortened and the insulation value is not displayed on the user interface of the inverter.

Parameter	Value range	Description
Threshold for the insulation warning	100 10,000 kΩ	If the value drops below the threshold, status code 1083 is displayed on the user interface of the inverter.

System

General

1. Enter the name of the system in the input field **PV System Name** (max. 30 characters).
2. Select the **Timezone Region** and **Timezone Location** in the drop-down lists.
3. Click **Save**.

✓ *System name, time zone, and time zone location are saved.*

Update

All available updates for inverters and other Fronius devices are provided on the product pages and in the "Fronius Download Search" area at www.fronius.com .

Update

1. Drag the firmware file into the **Drag & drop file here** field, or select via **Browse file**.

✓ *Update is started.*

Setup wizard

The guided setup wizard can be accessed here.

Restoring factory settings

All settings
Resets all configuration data, apart from the country setup. Changes to the country setup may only be made by authorized personnel.

All settings without network
Resets all configuration data, apart from the country setup and the network settings. Changes to the country setup may only be made by authorized personnel.

Event log

Current messages All current events of the linked system components are displayed here.

IMPORTANT!
Depending on the type of event, this must be confirmed via the "tick" button so that it can be further processed.

History
All events of the linked system components that are no longer present are displayed here.

Information

All the information regarding the system and the current settings is displayed and provided for download in this menu area.

License Manager

The power data and functional scope of the inverter are stored in the license file. If the inverter, power stage set PC board, or data communication area is replaced, the license file must also be replaced.

Licensing

Licensing - online (recommended)
This requires an Internet connection and a completed Fronius Solar.web configuration.

1. Finish all installation work (refer to the chapter headed Closing the inverter's connection area/housing cover, and commissioning on page 57).
2. Establish a connection to the user interface of the inverter.
3. Enter the serial number and verification code (VCode) of the defective and replacement device. The serial number and VCode can be found on the rating plate of the inverter (refer to the chapter headed Information on the device on page 15).
4. Click the **Start online licensing** button.
5. Skip past the Terms and conditions of use and Network settings menu items by clicking **Next**.

✓ *License activation is started.*

Licensing - offline
There must be no Internet connection in this case. If offline licensing is carried out while there is an active Internet connection, the license file is automatically loaded onto the inverter, resulting in the following error when the license file is uploaded: "The license has already been installed and the wizard can be closed".

1. Finish all installation work (refer to the chapter headed Closing the inverter's connection area/housing cover, and commissioning on page 57).
2. Establish a connection to the user interface of the inverter.
3. Enter the serial number and verification code (VCode) of the defective and replacement device. The serial number and VCode can be found on the rating plate of the inverter (refer to the chapter headed Information on the device on page 15).
4. Click the **Start offline licensing** button.
5. Download the service file onto the mobile device by clicking the **Download service file** button.
6. Open licensemanager.solarweb.com and log in with username and password.
7. Drag the service file into the **Drag service file here or click to upload** field or click to upload it.
8. Download the newly generated license file onto the mobile device by clicking the **Download license file** button.
9. Switch to the user interface of the inverter and drag the license file into the **Drag & drop license file here** field or select via **Choose license file**.

✓ *License activation is started.*

Support

Activating the support user

1. Click the **Enable Support User Account** button.

✓ *The support user is activated.*

IMPORTANT!
The support user exclusively enables Fronius Technical Support to configure settings on the inverter via a secure connection. Access is deactivated by clicking the **Terminate Support User Session** button.

Generating support info (for Fronius Support)

1. Click the **Generate support info** button.
2. The sdp.cry file is downloaded automatically. For manual download, click the **Download support info** button.

✓ *The sdp.cry file is saved in the downloads.*

Activating remote access

1. Click the **Activate Remote Access** button.

✓ *Remote access is activated for Fronius Support.*

IMPORTANT!
The remote access exclusively enables Fronius Technical Support to access the inverter via a secure connection. In this case, diagnostics data are transmitted, which are used for troubleshooting. The remote access can be activated only upon request by Fronius Support.

Communication

Network

Server addresses for data transfer
If a firewall is used for outgoing connections, allow the below protocols, server addresses, and ports for successful data transfer, see:

https://www.fronius.com/~/downloads/Solar%20Energy/Firmware/SE_FW_Changelog_Firewall_Rules_EN.pdf

When using FRITZ!Box products, configure Internet access without any restrictions or limitations. Do not set the DHCP Lease Time (validity) to 0 (=infinite).

LAN:

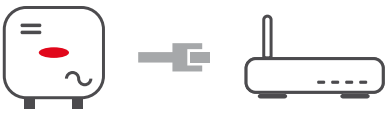

Establishing a connection:

1. Enter the host name.
2. Select the connection type: **Automatic** or **Static**.
3. For the **Static** connection type, enter the IP address, subnet mask, DNS, and gateway.
4. Click the **Connect** button.

✓ *The connection is established.*

After establishing the connection, check the connection status.

WiFi:

Establishing a connection via WPS:

☐ Activate the access point of the inverter. This is opened by touching the sensor > Communications LED flashes blue

1. Establish the connection to the inverter in the network settings (the inverter is displayed with the name "FRONIUS_" and the serial number of the device).
2. Enter the password from the rating plate and confirm.
   IMPORTANT!
   To enter the password, first select the **Connect using a security key instead** link in order to establish the connection with the password.
3. Enter the IP address 192.168.250.181 in the address bar of the browser and confirm.
4. In the **Communication** > **Network** > **WLAN** > **WPS** menu area, click the **Activate** button.
5. Activate WPS on the WiFi router (see WiFi router documentation).
6. Click on the **Start** button. The connection is established automatically.
7. Log in to the user interface of the inverter.
8. Check the network details and connection to Fronius Solar.web.

After connecting, the status of the connection should be checked.

Selecting and connecting to a WiFi network:
The networks found are displayed in the list. Click the refresh button ⟲ to perform a new search for available WiFi networks. If necessary, restrict the selection list further via the **Search network** input field.

1. Select network from the list.
2. Select the connection type: **Automatic** or **Static**.
3. For the **Automatic** connection type, enter the WiFi password and host name.
4. For the **Static** connection type, enter the IP address, subnet mask, DNS, and gateway.
5. Click the **Connect** button.

✓ *The connection is established.*

After establishing the connection, check the connection status.

Access point:

The inverter serves as the access point. A PC or mobile device connects directly to the inverter. Connecting to the Internet is not possible. Assign a **Network Name (SSID)** and **Network Key (PSK)** to establish a connection. Assign a **Network Key (PSK)** with at least 20 characters, consisting of upper and lower case letters, special characters, and numbers, to protect the device from unauthorized access.
It is possible to operate a connection via WiFi and via the access point at the same time.

Modbus

The inverter communicates with system components (e.g., Fronius Smart Meter) and other inverters via Modbus. The primary device (Modbus Client) sends control commands to the secondary device (Modbus Server). The control commands are executed by the secondary device.

RTU Server

The following input fields and functions are available for communication via Modbus RTU:

Meter address offset The value entered (1-247) is the identification number (unit ID) assigned to the meter. Factory setting: 200
Inverter address The value entered (1-247) is the identification number (unit ID) assigned to the inverter. Factory setting: 1
SunSpec Model Type There are two different settings, depending on the SunSpec model. **float:** SunSpec Inverter Model 111, 112, 113 or 211, 212, 213. **int + SF:** SunSpec Inverter Model 101, 102, 103 or 201, 202, 203.

Interface
Select one of the two interfaces **Modbus 0 (M0) RTU** or **Modbus 1 (M1) RTU**.

Baud Rate
The baud rate influences the speed of the transmission between the individual components connected in the system. When selecting the baud rate, it should be ensured that this is the same on the transmit and receive side.

Parity
The parity bit can be used for parity checks. This is used to identify transmission errors. In this case, a parity bit can ensure a specified number of bits. The value (0 or 1) of the parity bit must be calculated at the transmitter, and is checked at the receiver using the same calculation. The calculation of the parity bit can be carried out for even or odd parity.

Allow Control

If this option is activated, the inverter is controlled via Modbus.
Inverter control includes the following functions:
- On/off
- Power reduction
- Setting a constant power factor (cos phi)
- Setting a constant reactive power
- Battery control settings with battery

TCP Server

The following input fields and functions are available for communication via Modbus TCP:

Meter address offset

The value entered (1-247) is the identification number (unit ID) assigned to the meter.
Factory setting: 200

SunSpec Model Type
There are two different settings, depending on the SunSpec model.

float: SunSpec Inverter Model 111, 112, 113 or 211, 212, 213.
int + SF: SunSpec Inverter Model 101, 102, 103 or 201, 202, 203.

Modbus port
Number of the TCP port (502 or 1502) to be used for Modbus communication.

Meter Address
The value entered is the identification number (unit ID) assigned to the meter, which can be found on the user interface of the inverter in the **Communication** > **Modbus** menu area.
Factory setting: 200

Allow Control

If this option is activated, the inverter is controlled via Modbus.
Inverter control includes the following functions:
- On/off
- Power reduction
- Setting a constant power factor (cos phi)
- Setting a constant reactive power
- Battery control settings with battery

Restrict Control
Restrict the control of the inverter to a device with a fixed IP address.

Cloud control

The utility/energy supplier can influence the output power of the inverter with **Cloud control**. This requires the inverter to have an active Internet connection.

Parameter	Display	Description
Cloud control	Off	Cloud control of the inverter is deactivated.
	On	Cloud control of the inverter is activated.

Profile	Value range	Description
Allow cloud control for regulatory purposes (Technician)	Deactivated/ Activated	The function may be mandatory for proper operation of the system.*
Allow cloud control for Virtual Power Plants (Customer)	Deactivated/ Activated	If the **Allow remote control for regulatory purposes (technician)** function is activated (technician access required), the **Allow remote control for virtual power plants** function is automatically activated and cannot be deactivated.*

*** Cloud control**
A virtual power plant is an interconnection of multiple generators. This virtual power plant can be controlled by means of the cloud control via the Internet. An active inverter Internet connection is a prerequisite for this. System data are transferred.

Solar API

The **Solar API** is an IP-based, open JSON interface. If enabled, IOT devices in the local network may access inverter information without authentication. For security reasons, the interface is disabled in the factory. Activate the interface manually if it is required for a third-party application (e.g., EV charger, smart home solutions, etc.). If there is a Fronius Wattpilot in the network, the inverter automatically activates the **Solar API**.

Fronius recommends using Fronius Solar.web for monitoring and analyzing the inverter and connected system components.

In the event of a firmware update to version 1.14.x, the Solar API setting is applied. In systems with a version below 1.14.x, the Solar API is activated; with higher versions, it is deactivated but can be switched on and off via the menu.

Manually activating the Fronius Solar API
On the user interface of the inverter in the **Communication** > **Solar API**menu area, activate the function **Activate communication via Solar API**.

Fronius Solar.web

In this menu, you can agree to the technically necessary data processing or reject it.

In addition, the transfer of analysis data and remote configuration via Fronius Solar.web can be enabled or disabled.

Safety and grid requirements

Country setup

⚠ WARNING

Danger from unauthorized fault analyses and repair work.
This can result in serious injury and damage to property.
- ▶ Fault analyses and repair work on the PV system may only be carried out by installers/service technicians from authorized specialist companies in accordance with national standards and regulations.

NOTE

Risk due to unauthorized access.
Incorrectly set parameters can have a negative effect on the public grid and/or the grid power feed operation of the inverter and result in the loss of standard conformity.
- ▶ Parameters may only be adjusted by installers/service technicians from authorized specialist companies.
- ▶ Do not give the access code to third parties and/or unauthorized persons.

NOTE

Risk due to incorrectly set parameters.
Incorrectly set parameters can have a negative effect on the public grid and/or cause inverter malfunctions and failures and result in the loss of standard conformity.
- ▶ Parameters may only be adjusted by installers/service technicians from authorized specialist companies.
- ▶ Parameters may only be adjusted if this has been approved or requested by the utility.
- ▶ Any parameter adjustments must be made in compliance with nationally applicable standards and/or directives as well as the specifications of the utility.

The **Country Setup** menu area is intended exclusively for installers/service technicians from authorized specialist companies. To apply for the access code required for this menu area, see chapter Requesting inverter codes in Solar.SOS.

The selected country setup for the country in question contains preset parameters in accordance with nationally applicable standards and requirements. Changes may need to be made to the selected country setup depending on local grid conditions and the specifications of the utility.

Requesting inverter codes in Solar.SOS

The **Country Setup** menu area is intended exclusively for installers/service technicians from authorized specialist companies. The inverter access code required for this menu area can be requested in the Fronius Solar.SOS portal.

Requesting inverter codes in Fronius Solar.SOS:

1. Open solar-sos.fronius.com in the browser
2. Log in with your Fronius account
3. At the top right, click on the drop-down menu 👤

4 Select the **Show inverter codes** menu item

✓ *A contract page appears on which the request for the access code to change the grid parameters for Fronius inverters is located*

5 Accept the terms and conditions of use by checking **Yes, I have read and agree to the terms of use** and click **Confirm & Save**

6 After that, the codes can be retrieved in the drop-down menu at the top right under **Show inverter codes**

⚠ **CAUTION**

Risk due to unauthorized access.
Incorrectly set parameters can have a negative effect on the public grid and/or the grid power feed operation of the inverter and result in the loss of standard conformity.

▶ Parameters may only be adjusted by installers/service technicians from authorized specialist companies.

▶ Do not give the access code to third parties and/or unauthorized persons.

Absolute Generation Limit

Activating this function limits the output power of the inverter to the specified value in watts.

Import limitation

Energy companies or grid operators can prescribe import limitations for inverters. The amperage is limited to the set value.

1 Under **Limit** select **Current Limitation**.

2 Enter the **limit value** in amperes.

3 Click on **Save**.

Feed-in limit

Energy companies or grid operators can prescribe feed-in limits for inverters (e.g., max. 70% of the kWp or max. 5 kW). The inverter limits the active power at the grid connection point (installation location of the Fronius Smart Meter or primary meter) to the set value.

The inverter takes account of self-consumption in the household before the power is reduced. An individual limit can be set.

In order to minimize the yield losses due to the power of feeding in limitation, the power available from the module array can be:

- Used for controllable system components, such as Fronius Ohmpilot or Fronius Wattpilot
- Used by loads controlled via I/Os

If these possibilities have been exhausted, the power drawn from the module array is reduced to such an extent that the feed-in limit is not exceeded.

Installation variants with an inverter, Fronius Smart Meter, and system components are listed under Components.

Total DC power of the system
The input field for the total DC power of the entire system in Wp. Always enter this value if the **Maximum grid feed-in power** is specified in %.

Power Control deactivated
The inverter converts all available PV energy.

Power Control activated
Feeding in limited with the following selection options:

- **Total Power Limit**
  Set the value of the permissible total power of feeding in for the photovoltaic system.
- **Limit per phase – asymmetric generation**
  The inverter determines the optimum per phase. The inverter regulates the individual phases in such a way that none of the phases exceeds the set value.
- **Limit per phase – weakest phase**
  The inverter measures each individual phase. If the permissible feed-in limit is exceeded on one phase, the inverter symmetrically reduces the total power for all phases until the limit is reached.

IMPORTANT! Implement the settings for **Limit per phase** if national standards and regulations require a limitation of the single-phase power. Set the value for the permissible power of feeding in for each phase.

IMPORTANT!Power Control settings are automatically applied for the dynamic feed-in limit of I/O power management. **Total Power Limit** is the default configuration.

Dynamic feed-in limit (Soft Limit)
If this value is exceeded, the inverter readjusts down to the set value.

Export Limit Protection ($P_{AV,E}$ protection)
This function monitors compliance with the feed-in limit. If **Dynamic feed-in limit (Soft Limit)** is activated, the inverter controls the power of feeding in in such a way that this function is usually not activated. If the specified limit values and the switch-off times are exceeded, this protection function disconnects the inverter from the grid.

The **Maximum grid feed-in power ($P_{AV,E}$)** in the case of an asymmetric feed-in (**Limit per phase – asymmetric generation** or **Limit per phase – weakest phase**) can be combined with the export limit protection ($P_{AV,E}$ protection) function.
The **Maximum grid feed-in power** is calculated as follows: **Maximum grid feed-in power per phase ($P_{AV,E}$)** x 3.

The export limit protection ($P_{AV,E}$ protection) function is only possible if a Smart Meter IP configured with MQTT is installed at the feed-in point.

Export Limit Protection (Hard Limit Trip)
IMPORTANT! This function is only available if **Dynamic feed-in limit (Soft Limit)** is activated.

Maximum grid feed-in power
Input field for the **Maximum grid feed-in power** in W or % (setting range: -10 % to 100 %).
If there is no meter in the system or if the primary meter has failed, the inverter limits its output power to the set value.

If this value is exceeded, the inverter switches off within max. 5 s. This value must be higher than the value set for **Dynamic feed-in limit (Soft Limit)**.

If required, enable the fail-safe function **Reduce inverter power to 0% if meter connection has been lost**. When this function is enabled, the inverter activates standby mode. No feed-in takes place.

The use of WiFi for communication between the Fronius Smart Meter and the inverter is not recommended with the fail-safe function activated at the same time. Even short-term disconnections can cause the inverter to shut down. This problem arises with weak WiFi signal strengths, a slow or overloaded WiFi connection, and automatic channel selection of the router.

Feed-in limit – examples

"Total Power Limit"
(feed-in limit 0 kW)

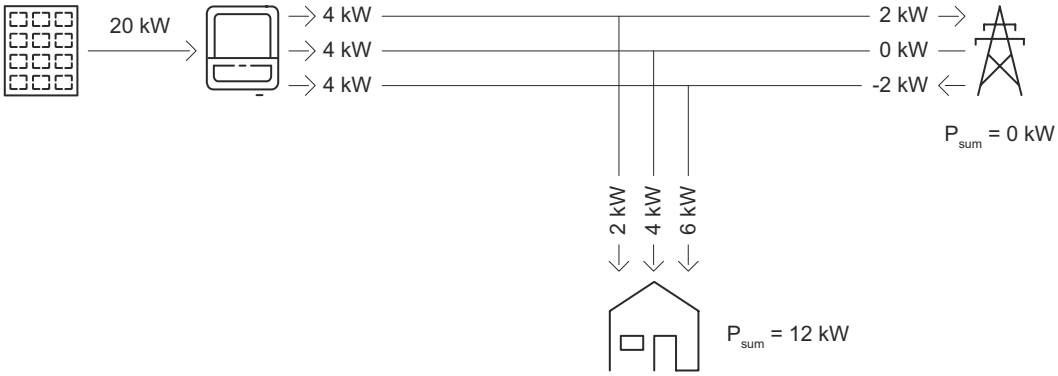

Explanation
No power (0 kW) may be fed into the public grid at the grid feed-in point. The load requirement in the home network (12 kW) is supplied by the power generated by the inverter.

"Limit per phase – asymmetric generation"
(feed-in limit 0 kW per phase) – asymmetric

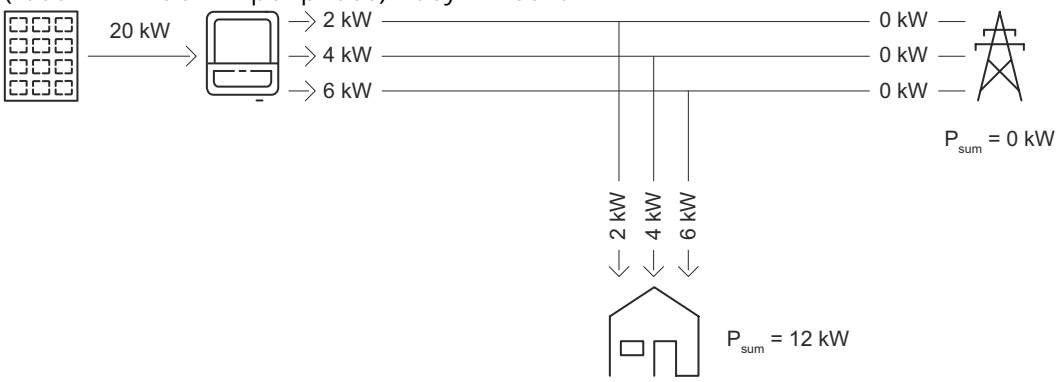

Explanation
The load requirement in the home network per phase is determined and supplied.

"Limit per phase – asymmetric generation"
(feed-in limit 1 kW per phase) – asymmetric

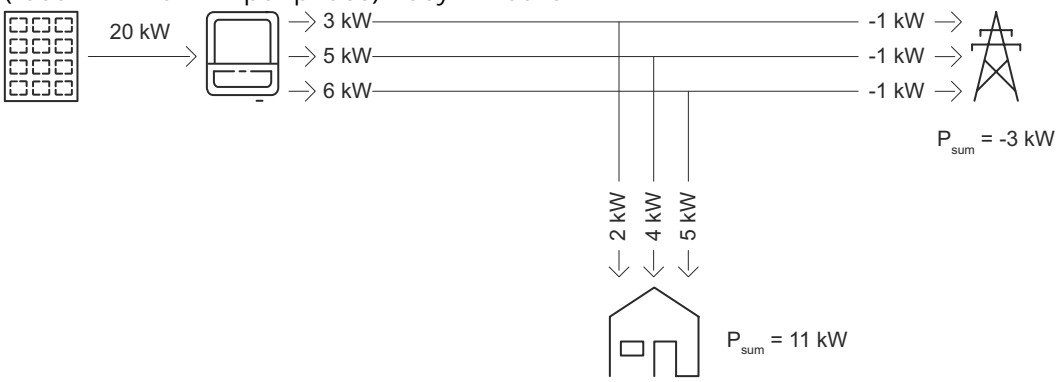

Explanation
The load requirement in the home network per phase is determined and supplied. In addition, the excess production (1 kW per phase) is fed into the public grid in accordance with the maximum permitted feed-in limit.

"Limit per phase – weakest phase"
(feed-in limit 0 kW per phase) – symmetrical

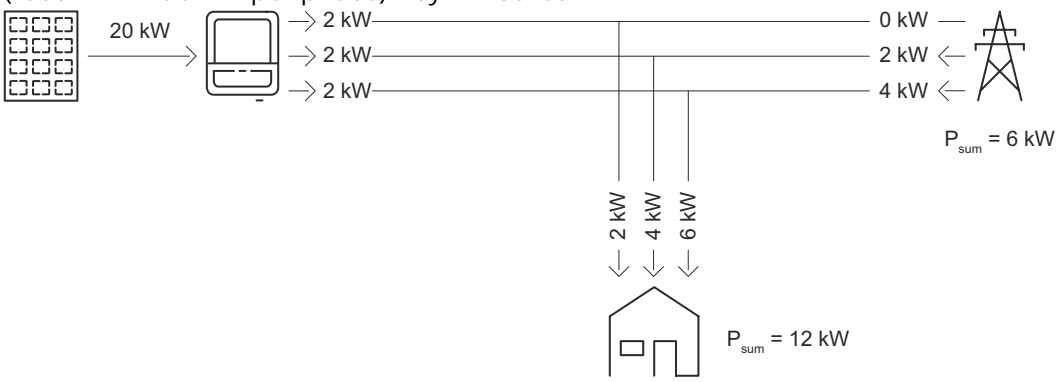

Explanation
The weakest phase in the load requirement in the home network is determined (phase 1 = 2 kW). The result of the weakest phase (2 kW) is applied to all phases. Phase 1 (2 kW) can be supplied. Phase 2 (4 kW) and phase 3 (6 kW) cannot be supplied, power from the public grid is required (phase 2 = 2 kW, phase 3 = 4 kW).

"Limit per phase – weakest phase"
(feed-in limit 1 kW per phase) – symmetrical

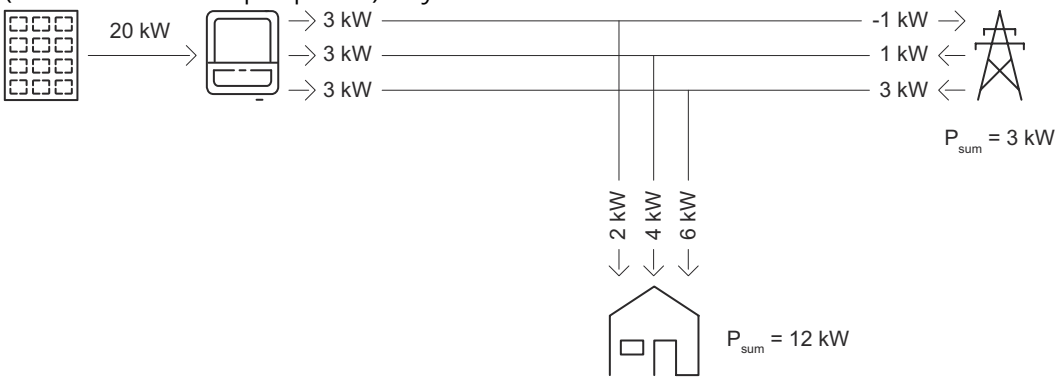

Explanation
The weakest phase in the load requirement in the home network is determined (phase 1 = 2 kW) and the max. permitted feed-in limit (1 kW) is added. The result of the weakest phase (2 kW) is applied to all phases. Phase 1 (2 kW) can be supplied. Phase 2 (4 kW) and phase 3 (6 kW) cannot be supplied, power from the public grid is required (phase 2 = 1 kW, phase 3 = 3 kW).

Multiple Inverter Control

IMPORTANT! To view and change settings in this menu item, select the **Technician** user. Enter and confirm the password for the **Technician** user. Settings in this menu area may only be made by technical specialists.

The inverter can be used as a primary device to control dynamic feed-in limits for additional Fronius inverters (secondary devices) so that feed-in limits prescribed by energy companies or utilities can be centrally managed. This control refers to the **Soft Limit** feed-in limit, see Feed-in limit. To do so, the following requirements must be met:

- A Fronius Smart Meter is configured as a primary meter and connected to the master.
- **Power Control** is enabled and configured in the **Feed-in limit** menu on the user interface of the primary device. The power control limit is set to **Total Power Limit**.
- Master and secondary device(s) are physically connected to the same network router via LAN.
- If **Use Modbus TCP** is enabled, the inverter control via Modbus TCP must be activated and configured for all secondary devices.

IMPORTANT! Only one primary meter is required for the primary device.

IMPORTANT! If an inverter with a battery is connected, use this inverter as the primary device for **Multiple Inverter Control**.

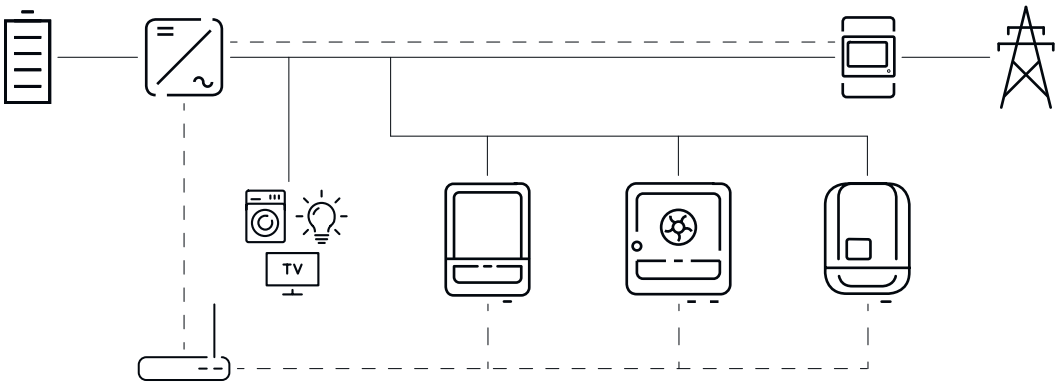

Example connection diagram for Multiple Inverter Control

System limits
- Systems with a maximum of 20 inverters (1 primary device + 19 secondary devices) are supported if the **Use Modbus TCP** function is enabled. Otherwise, a maximum of one primary device and two secondary devices are supported.
- The control system is designed for photovoltaic systems with a total output of up to 300 kW.
- In the case of larger system capacities, the control times in the system are extended.
- The use of a plant controller is recommended for systems >300 kW.

External grid and system protection
Regional standards and guidelines may require the installation of external grid and system protection for systems >30 kVA (see Central grid and system protection).

Multiple Inverter Control is available for the following device combinations:

Primary devices	Secondary devices
GEN24, Verto, Tauro	- GEN24 - Verto - Tauro - Argeno - SnapINverter with Fronius Datamanager 2.0*

** Up to four additional SnapINverters can be connected to each SnapINverter with Fronius Datamanager 2.0.*

Primary meter
One Fronius Smart Meter acts as the only primary meter and is connected directly to the primary device. This Smart Meter measures the total output power of all inverters into the grid and passes this information to the primary device.

Primary device
Configure the feed-in limit on the user interface of the inverter:

1. In the **Safety and Grid Regulations** > **Feed-in limit** menu area, enable the **Power Control** function and select **Total Power Limit**.
2. Configure the country-specific settings.
3. In the **Safety and Grid Regulations** > **Multiple Inverter Control** menu area, enable the **Multiple Inverter Control** function.
   The primary device automatically scans the network for available secondary devices.
   ✓ *A list shows the inverters found.*

To perform the search again, press the Refresh button. ⟳

If **Use Modbus TCP** is enabled, it is also possible to select Fronius SnapINverters with Datamanager 2.0 and Fronius Argeno with **Use Inverter**.

4. Enable **Use Inverter** against all secondary devices to which a common feed-in limit applies. Click **Use all Inverters** to enable the function for the primary device and all secondary devices.

   The status of the inverters listed is displayed as follows:
   - **Inactive**: Secondary device is not configured for the power control or a firmware update is required.
   - **Disconnected**: Secondary device is configured, network connection not possible.
   - **Connected**: Secondary device is configured and accessible via the network of the primary device.
5. In the **Safety and Grid Regulations** > **I/O Power Management** menu area, set the controlling priorities as follows:
   1. **I/O Power Management**
   2. **Feed-in limit**
   3. **Modbus Control**

Adding Fronius Argeno and other inverters manually

1. In the **Multiple Inverter Control** menu, select the **Multiple Inverter Control** function.
2. Select additional inverters and click **+ Add**.
3. Enter the name, hostname or IP address, and the Modbus address of the secondary device.
4. Click **Add**.

For more information on configuring the Fronius Argeno or Fronius Datamanager 2.0 as a secondary device, refer to the respective operating instructions.

Secondary device
Each secondary device takes over the settings for the feed-in limit from the primary device. A secondary device does not transmit any data for the feed-in limit to the primary device. To do so, the following requirements must be met:
- **Multiple Inverter Control** is enabled and configured in the **Multiple Inverter Control** menu on the user interface of the primary device.

Set the following configurations for the feed-in limit on the secondary device:

User interface secondary device GEN24 / Verto / Tauro

1. Select the user **Technician** and enter the password for the user **Technician**.

Only carry out work steps 2 and 3 if **Use Modbus TCP** is enabled on the primary device.

2 In the **Communication** > **Modbus** menu area, enable **TCP Server** mode and the **Allow Control** function.

3 For a fail-safe scenario, in the **Safety and Grid Regulations** > **I/O Power Management** menu area, set the controlling priorities as follows:
1. **Modbus Control**
2. **Feed-in limit**
3. **I/O Power Management**

4 In the **Safety and Grid Regulations** > **Feed-in limit** menu area, select and edit the following settings:
- Enable the **Power Control** function.
- Select **Total Power Limit** and specify the **Total DC power of the system** in watts.
- Enable the **Dynamic feed-in limit (Soft Limit)** and enter a value of 0 W for the **Maximum grid feed-in power**.
- Enable the **Reduce inverter power to 0% if meter connection has been lost** function.

I/O Power Management

General
Settings relevant to the grid operator are defined as rules under this menu item. This relates to an effective power limit in % or watts and/or a power factor specification. To view and change settings, select the **Technician** user, and enter and confirm the password. Only technical specialists may make settings in this menu area.

Under **Rules**, expand a menu area (e.g., **Rule 1**). Configure the following settings:

Limitation

IMPORTANT!
A dynamic feed-in limit for several inverters can be configured under Feed-in limit. I/O power management rules are transferred from the inverter (primary device) to connected inverters in the system (secondary devices).

Select the following rules for power management:
- **I/O Generation Limit (%)**: The total output power of the connected inverter is statically limited to the defined value of the absolute rated power.
- **Export Limit Control (W)**: The active power fed in at the grid connection point is limited to the set value (e.g., 5000 watts). The output powers of the inverters (primary and secondary devices) are dynamically adjusted depending on their self-consumption.
- **Shutdown single device**: The inverter stops grid power feed operation and switches to standby mode.

IMPORTANT!
The rules for shutdown apply to this device and cannot be applied to other inverters in the system.

Input pattern (assignment of individual I/Os)
1 click = white, contact open
2 clicks = blue, contact closed
3 clicks = gray, not used

Power Factor (cos φ) (define value)

Impedance response
- **Capacitive**
- **Inductive**

DNO Feedback
If the rule is activated, always configure the **DNO Feedback** output, e.g., for operating a signal device.

The **Import** and **Export** of defined rules can be carried out in the data format *.fpc. The rules and pin assignments in the following connection examples are not the only possible configurations. For pin assignment, take into account the available connections at the Data communication area and settings of the device configuration.

If there is an active rule for the control of the inverter, the device indicates this in the **overview** of the user interface under **Device State**.

Controlling Priorities
Used to set controlling priorities for I/O Power Management (DRM or ripple control receiver), the feed-in limit, and control via Modbus.

1 = highest priority, 3 = lowest priority

Local priorities of the I/O power management, the feed-in limit, and the Modbus interface are deactivated by cloud control commands (regulatory purposes and virtual power plants) – see Cloud control – and by backup power.

In terms of controlling priorities, the device differentiates between **power control** and **inverter shutdown**. Inverter shutdown always takes precedence over power control. An inverter shutdown command is always executed and does not need to be prioritized.

Power control
- I/O Power Management (DRM/ripple control receiver signal) – according to command
- Export Limitation (Soft Limit) – always active
- Modbus (generation limit) – according to command

Inverter shutdown
- Shutdown single device
- Export Limitation (Hard Limit)
- Modbus (shutdown command) – according to command

4-relay connection example

Connect the ripple control signal receiver and the I/O terminals of the inverter to one another as shown in the connection diagram.
For distances greater than 10 m between the inverter and the ripple control signal receiver, use a shielded data communication cable (CAT 5 or higher) with twisted cable pairs. Connect the shielding on one side to the terminal of the data communication area (SHIELD).

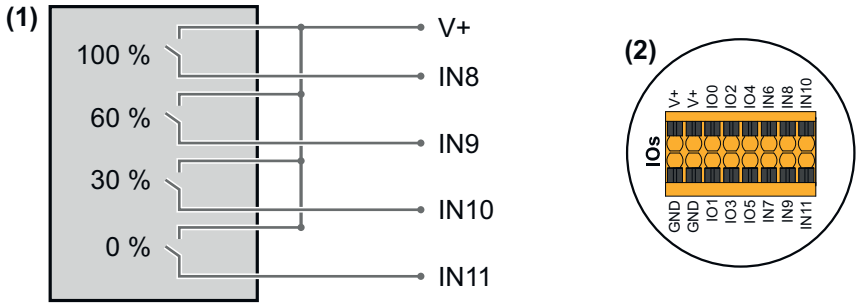

(1) Ripple control signal receiver with 4 relays for effective power limitation.
(2) I/O connection terminals of the data communication area.

Use pre-configured file for 4-relay operation:

1. Download the file (.fpc) under 4-relay operation to the mobile device.
2. Upload the file (.fpc) in the **I/O Power Management** menu area by clicking the **Import** button.
3. Click **Save**.

✓ *The settings for 4-relay operation are saved.*

I/O power management settings – 4 relay example

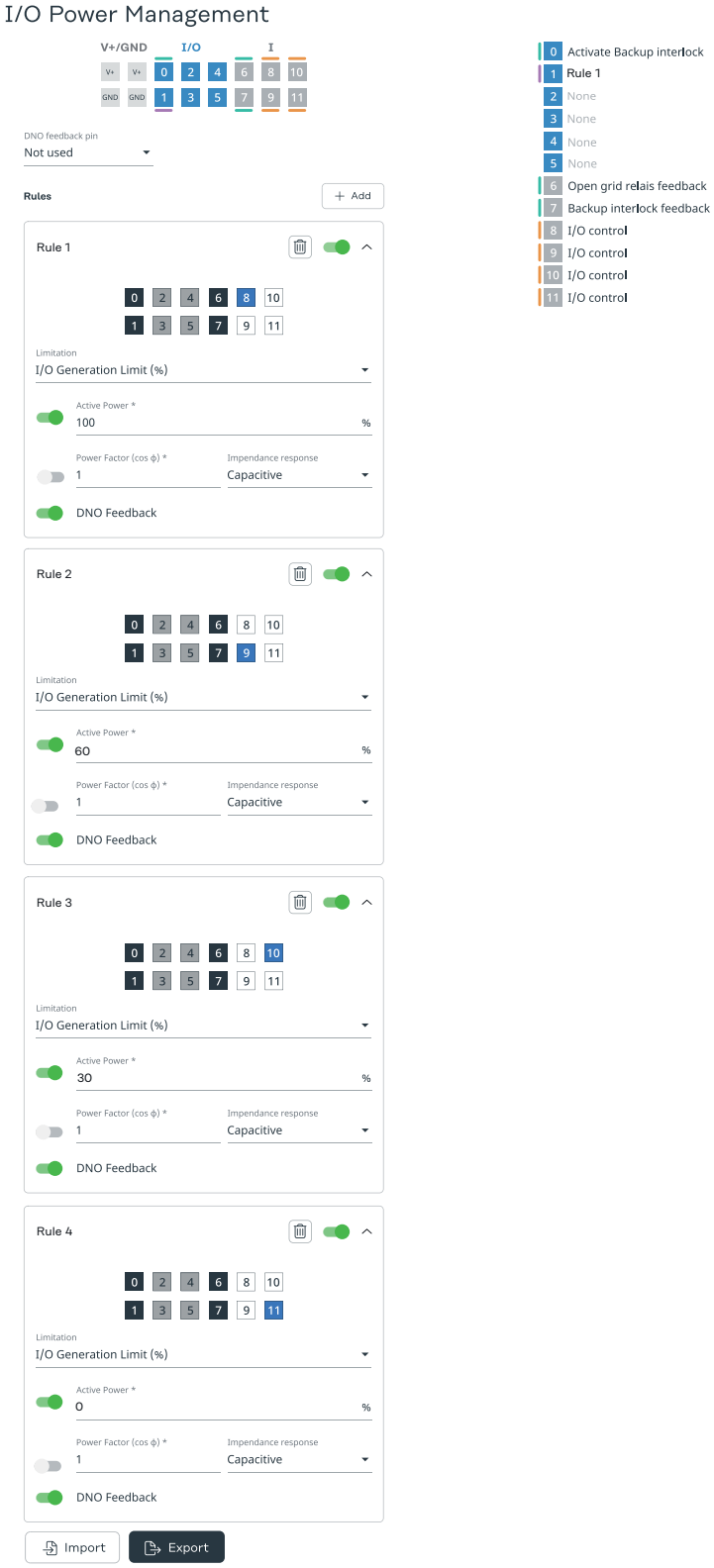

3-relay connection example

Connect the ripple control signal receiver and the I/O terminals of the inverter to one another as shown in the connection diagram.
For distances greater than 10 m between the inverter and the ripple control signal receiver, use a shielded data communication cable (CAT 5 or higher) with twisted cable pairs. Connect the shielding on one side to the terminal of the data communication area (SHIELD).

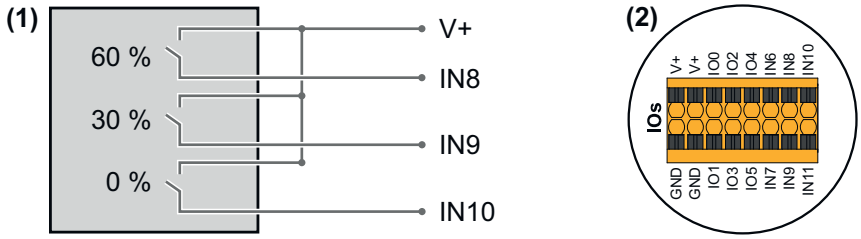

(1) Ripple control signal receiver with 3 relays for effective power limitation.
(2) I/O connection terminals of the data communication area.

Use pre-configured file for 3-relay operation:

1. Download the file (.fpc) under 3-relay operation to the mobile device.
2. Upload the file (.fpc) in the **I/O Power Management** menu area by clicking the **Import** button.
3. Click **Save**.

✓ *The settings for 3-relay operation are saved.*

I/O power management settings – 3 relay example

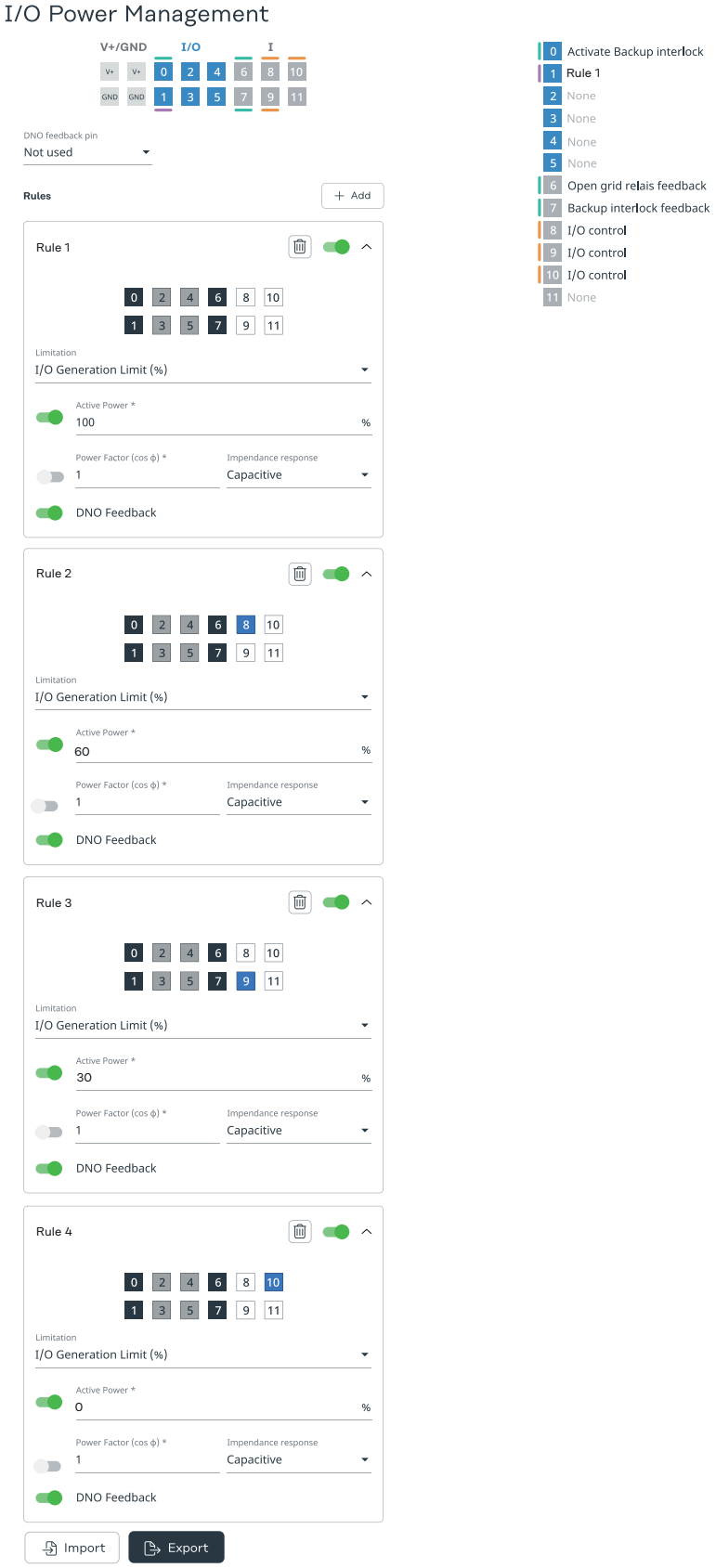

2-relay connection example

Connect the ripple control signal receiver and the I/O terminals of the inverter to one another as shown in the connection diagram.
For distances greater than 10 m between the inverter and the ripple control sig-

nal receiver, use a shielded data communication cable (CAT 5 or higher) with twisted cable pairs. Connect the shielding on one side to the terminal of the data communication area (SHIELD).

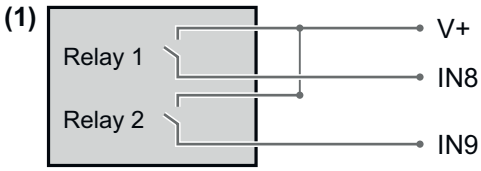

Relay 1	Relay 2	Active Power
0	0	100 %
1	0	60 %
0	1	30 %
1	1	0 %

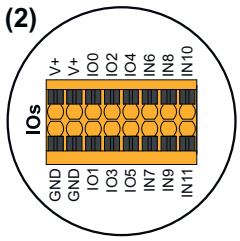

(1) Ripple control signal receiver with 2 relays for effective power limitation.
(2) I/O connection terminals of the data communication area.

Use pre-configured file for 2-relay operation:

1. Download the file (.fpc) under 2-relay operation to the mobile device.
2. Upload the file (.fpc) in the **I/O Power Management** menu area by clicking the **Import** button.
3. Click **Save**.

✓ *The settings for 2-relay operation are saved.*

I/O power management settings – 2 relay example

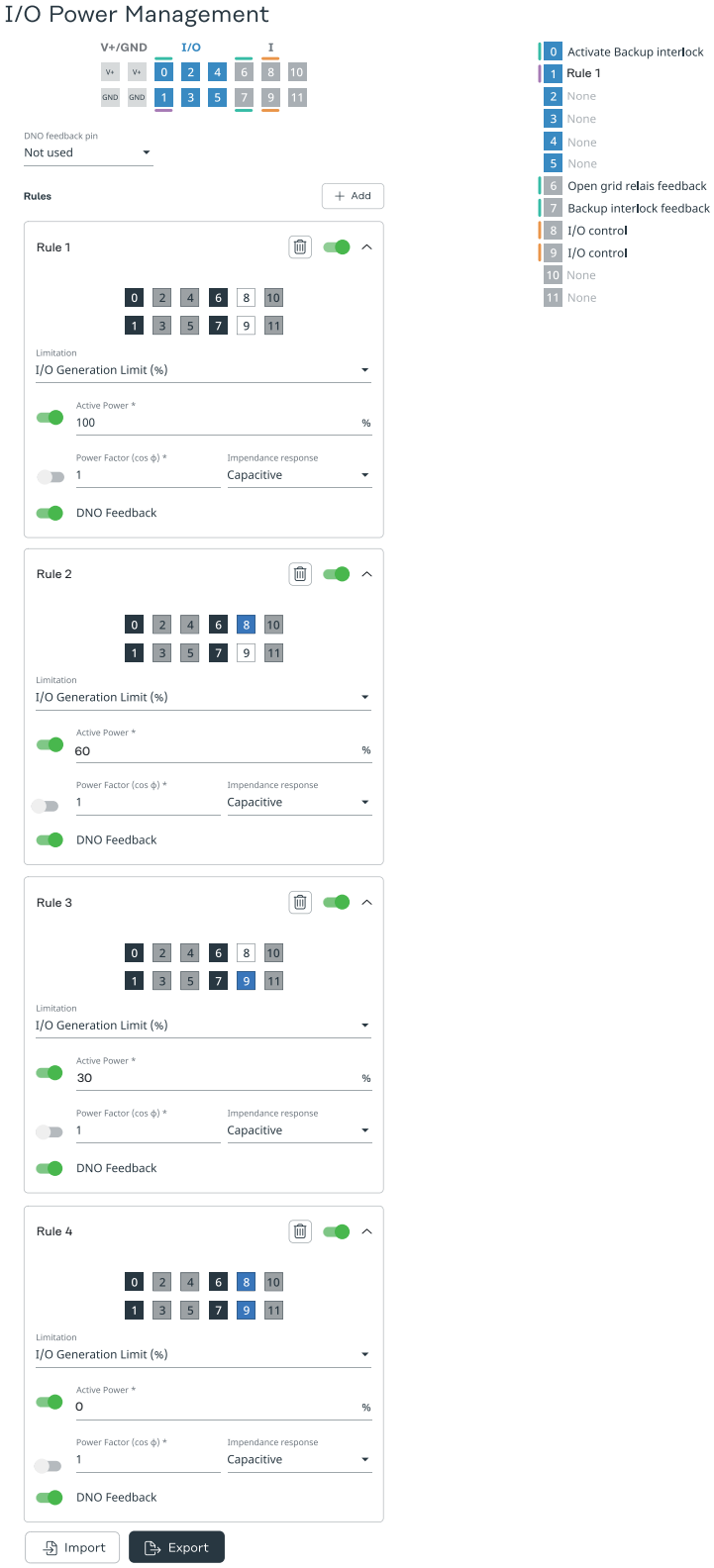

1-relay connection example

Connect the ripple control signal receiver and the I/O terminals of the inverter to one another as shown in the connection diagram.
For distances greater than 10 m between the inverter and the ripple control signal receiver, use a shielded data communication cable (CAT 5 or higher) with twisted cable pairs. Connect the shielding on one side to the terminal of the data communication area (SHIELD).

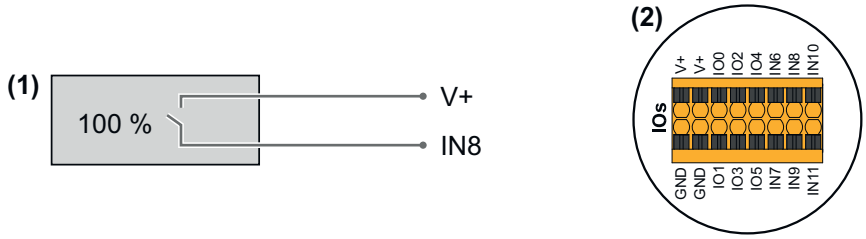

(1) Ripple control signal receiver with 1 relay for effective power limitation.
(2) I/O connection terminals of the data communication area.

Use pre-configured file for 1-relay operation:

1. Download the file (.fpc) under 1-relay operation to the mobile device.
2. Upload the file (.fpc) in the **I/O Power Management** menu area by clicking the **Import** button.
3. Click **Save**.

✓ *The settings for 1-relay operation are saved.*

I/O power management settings – 1 relay example

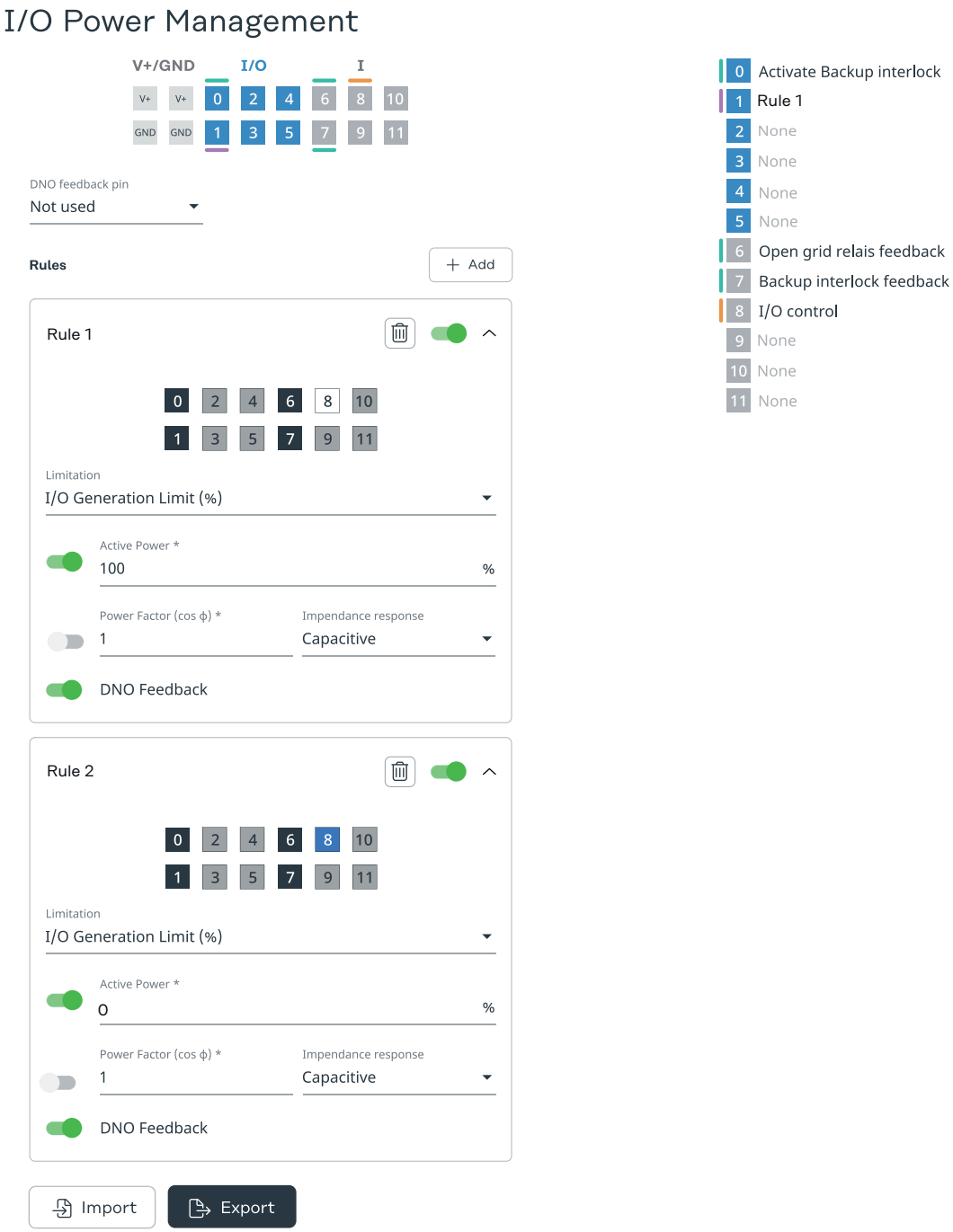

Connecting the ripple control receiver with several inverters

The grid operator may request the connection of one or more inverters to a ripple control receiver in order to limit the active power and/or the power factor of the photovoltaic system.

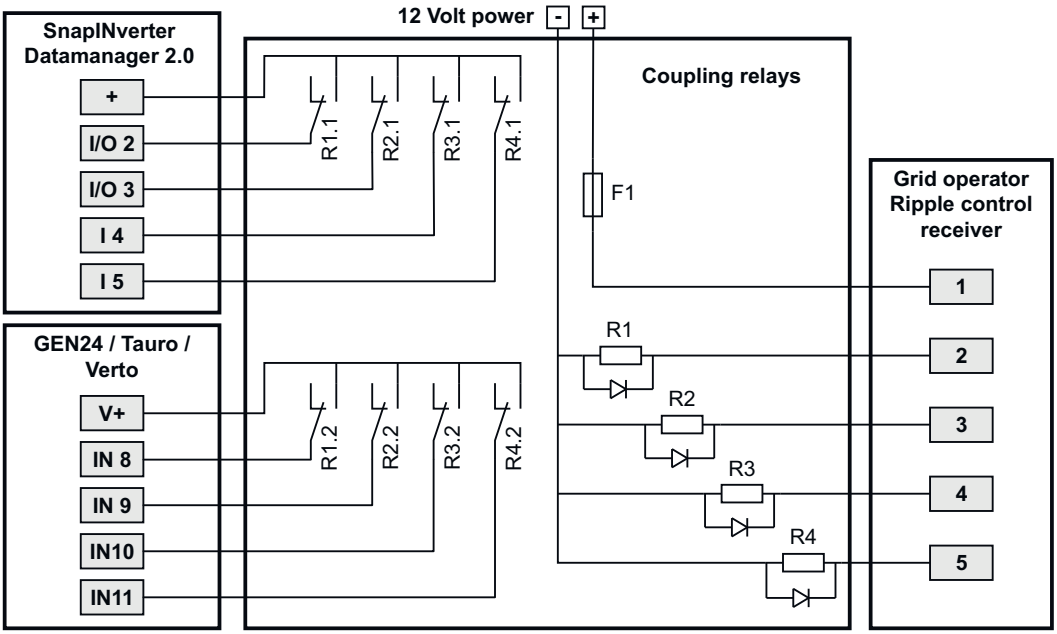

Connection diagram for ripple control receiver with several inverters

Connect the following Fronius inverters to a ripple control receiver via a distributor (coupling relay):

- Symo GEN24
- Primo GEN24
- Tauro
- Verto
- SnapINverter (only devices with Fronius Datamanager 2.0)

On the user interface of each inverter connected to the ripple control receiver, set the same parameters for I/O power management.

Appendix

Service, maintenance and disposal

General

The inverter is designed so that it does not require additional maintenance work. Nevertheless, a few points must be considered during operation to ensure that the inverter works perfectly.

Maintenance

Maintenance and service work may only be carried out by a technical specialist.

Cleaning

Wipe the inverter, if necessary, with a damp cloth.
Do not use cleaning agents, scouring agents, solvents, or similar products to clean the inverter.

Operation in dusty environments

NOTE

If the inverter is operated in dusty environments, dirt may build up on the heat sink and fan.
This may result in a loss of power due to insufficient cooling of the inverter.

- ▶ Make sure that the ambient air can always flow through the inverter's ventilation slots unimpeded.
- ▶ Remove any build-ups of dirt from the heat sink and the fan.

1

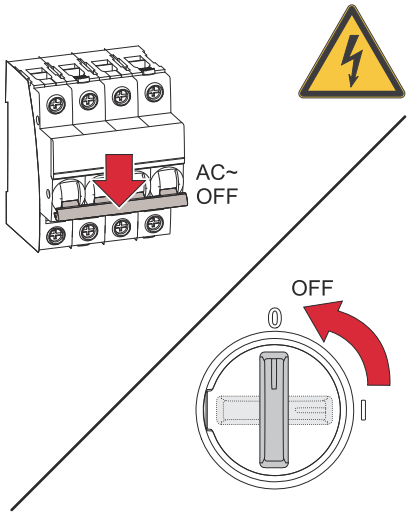

Switch off power to the inverter and wait for the capacitors to discharge (2 minutes) and the fan to shut down.
Turn the DC disconnector to the "off" switch setting.

2

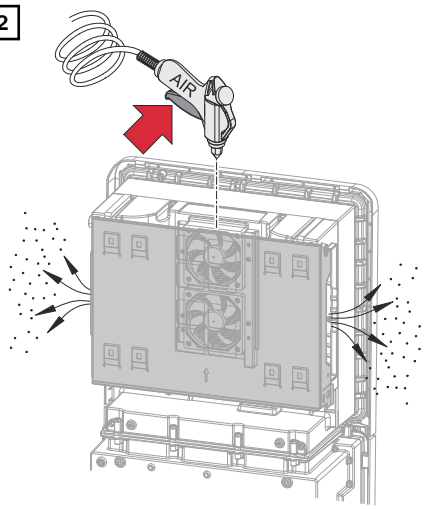

Remove any build-up of dirt on the heat sink and fan using compressed air, a cloth, or a brush.

NOTE

Risk due to damage to the fan bearing in the event of incorrect cleaning.
Excessive speeds and the application of pressure to the fan bearing can cause damage.
- ▶ Block the fan and clean with compressed air.
- ▶ When using a cloth or brush, clean the fan without applying any pressure.

To start up the inverter again, follow the steps listed above in reverse order.

Safety

⚠ WARNING

Danger from mains voltage and DC voltage from PV modules.
This can result in serious injury and damage to property.
- ▶ The connection area must only be opened by an authorized electrician.
- ▶ The separate power stage set area must only be opened by Fronius-trained service technicians.
- ▶ Prior to any connection work, disconnect the inverter on the AC side and the DC side.

⚠ WARNING

Danger due to residual voltage from capacitors.
This can result in serious injury and damage to property.
- ▶ Allow the capacitors of the inverter to discharge (2 minutes).

Disposal

In accordance with the EU Directive and national law, the following products must be disposed of separately and recycled:
- Waste electrical and electronic equipment
- Used batteries (portable batteries, industrial batteries)

Used equipment and batteries must be returned to the distributor or an authorized local collection system. Do not dispose of batteries with domestic waste. Protect batteries from high temperatures, direct sunlight, moisture and corrosive environments.

Arrange for the safe collection and proper disposal of damaged, leaking or used batteries by a battery recycling company or the Fronius Service Partner.

In addition, it should be noted that batteries contain substances that, if disposed of improperly, can have a significant negative impact on the environment as well as on human health and the safety of persons, in particular due to the leakage of hazardous substances such as heavy metals or electrolytes, which can contaminate soil, water and air.

This ensures environmental protection and the sustainable use of natural resources.

Packaging materials

- Collect separately
- Observe local regulations
- Compress the cardboard box to reduce volume

Warranty provisions

Warranty

Detailed warranty conditions specific to your country can be found at https://www.fronius.com/en/download-center?searchword=Warranty+conditions .

If there is a warranty for the relevant product, register the product at https://warranty.fronius.com/ and activate or extend the warranty.

Status codes and remedy

Display

Status codes are displayed on the user interface of the inverter in the **System** > **Event Log** menu area or in the user menu under **Notifications** and in Fronius Solar.web*.

* If configured accordingly, see chapter Fronius Solar.web on page 20.

Status codes

1030 – WSD Open (operating LED: flashes red)

Cause: A device that is connected in the WSD chain has interrupted the signal line (e.g., surge protection device) or the bypass installed ex works as standard has been removed and no trigger device has been installed.

Remedy: If the SPD surge protection device has tripped, the inverter must be repaired by an authorized specialist.

OR: Install the bypass installed ex works as standard or a trigger device.

OR: Turn the WSD (wired shutdown) switch to position 1 (WSD primary device).

WARNING

Danger from work that is not carried out properly.
This can result in serious injury and damage to property.

- The installation and connection of an SPD surge protection device may only be carried out by Fronius-trained service personnel in accordance with the technical specifications.
- Observe safety rules.

Technical data

Verto 15.0

Input data	
Maximum input voltage (at 1000 W/m² / -10 °C in an open circuit)	1000 V_{DC}
Start-up input voltage	150 V_{DC}
MPP voltage range	210–870 V_{DC}
Number of MPP controllers	3
Maximum total input current ($I_{DC\ max}$) PV1 / PV2 / PV3 per string	75 A 28 / 28 / 28 A 28 A
Max. total short circuit current [8] PV1 / PV2 / PV3 per string	100 A 50 / 50 / 50 A 50 A
Maximum total array power ($P_{PV\ max}$) PV1 / PV2 / PV3	22.5 kWp 20 / 20 / 20 kWp
DC overvoltage category	2
Max. inverter backfeed current to the array [3]	50 A[4]
Max. capacity of the PV generator against earth	5400 nF
Limit value of the insulation resistance test between module array and ground (on delivery) [7]	100 kΩ
Adjustable range of the insulation resistance test between module array and ground [6]	10–10,000 kΩ
Limit value and trip time of sudden residual current monitoring (on delivery)	30 / 300 mA / ms 60 / 150 mA / ms 90 / 40 mA / ms
Limit value and trip time of continuous residual current monitoring (on delivery)	300 / 300 mA / ms
Adjustable range of continuous residual current monitoring [6]	30–300 mA
Cyclical repetition of insulation resistance test (on delivery)	24 h
Adjustable range for cyclical repetition of insulation resistance test	-

Output data	
Grid voltage range	176–528 V_{AC}
Rated grid voltage	220 | 230 V_{AC}[1]
Rated power	15 kW
Rated apparent power	15 kVA
Rated frequency	50 / 60 Hz [1]
Maximum output current/phase	38.5 A
Power factor (cos phi)	0-1 ind./cap.[2]
Grid connection	3~ (N)PE 380 / 220 V_{AC} 3~ (N)PE 400 / 230 V_{AC} 3~ (N)PE 440 / 254 V_{AC} 3~ (N)PE 480 / 277 V_{AC}

Output data	
Earthing systems	TT (allowed if U_{N_PE} < 30 V) TN-S (allowed) TN-C-S (allowed) IT (not allowed)
Maximum output power	15 kW
Rated power	15 kW
Rated output current/phase	22.7 / 21.7 / 19.7 / 18.1 A
Total harmonic distortion	< 3%
AC overvoltage category	3
Current (inrush) [5]	24.72 A peak / 6.82 A rms over 1.99 ms [4]
Max. output fault current/duration	33.8 A / 11.8 ms

General data	
Night-time power loss = standby consumption	12 W
European Efficiency (210 / 620 / 870 V_{DC})	97.08% / 98.19% / 97.54%
Maximum efficiency	98.53%
Protective class	1
EMC emission class	B
Pollution degree	3
Permitted ambient temperature	-40 °C to +60 °C
Permitted storage temperature	-40 °C to +70 °C
Relative humidity	0–100%
Sound pressure level	56.5 dB(A) (ref. 20 µPA)
Ingress protection rating	IP66
Dimensions (height × width × depth)	730 × 540 × 278 mm
Weight	35.2 kg
Weight with packaging	41.8 kg
Inverter topology	Non-insulated, transformerless

Verto 17.5

Input data	
Maximum input voltage (at 1000 W/m² / -10 °C in an open circuit)	1000 V_{DC}
Start-up input voltage	150 V_{DC}
MPP voltage range	245–870 V_{DC}
Number of MPP controllers	3
Maximum total input current ($I_{DC\ max}$) PV1 / PV2 / PV3 per string	75 A 28 / 28 / 28 A 28 A
Max. total short circuit current [8] PV1 / PV2 / PV3 per string	100 A 50 / 50 / 50 A 50 A
Maximum total array power ($P_{PV\ max}$) PV1 / PV2 / PV3	26.25 kWp 20 / 20 / 20 kWp
DC overvoltage category	2

Input data	
Max. inverter backfeed current to the array [3]	50 A[4]
Max. capacity of the PV generator against earth	5400 nF
Limit value of the insulation resistance test between module array and ground (on delivery) [7]	100 kΩ
Adjustable range of the insulation resistance test between module array and ground [6]	10–10,000 kΩ
Limit value and trip time of sudden residual current monitoring (on delivery)	30 / 300 mA / ms 60 / 150 mA / ms 90 / 40 mA / ms
Limit value and trip time of continuous residual current monitoring (on delivery)	300 / 300 mA / ms
Adjustable range of continuous residual current monitoring [6]	30–300 mA
Cyclical repetition of insulation resistance test (on delivery)	24 h
Adjustable range for cyclical repetition of insulation resistance test	-

Output data	
Grid voltage range	176–528 V_{AC}
Rated grid voltage	220 | 230 V_{AC}[1]
Rated power	17.5 kW
Rated apparent power	17.5 kVA
Rated frequency	50 / 60 Hz [1]
Maximum output current/phase	38.5 A
Power factor (cos phi)	0-1 ind./cap.[2]
Grid connection	3~ (N)PE 380 / 220 V_{AC} 3~ (N)PE 400 / 230 V_{AC} 3~ (N)PE 440 / 254 V_{AC} 3~ (N)PE 480 / 277 V_{AC}
Earthing systems	TT (allowed if U_{N_PE} < 30 V) TN-S (allowed) TN-C-S (allowed) IT (not allowed)
Maximum output power	17.5 kW
Rated power	17.5 kW
Rated output current/phase	26.5 / 25.4 / 23 / 21.1 A
Total harmonic distortion	< 3%
AC overvoltage category	3
Current (inrush) [5]	24.72 A peak / 6.82 A rms over 1.99 ms [4]
Max. output fault current/duration	33.8 A / 11.8 ms

General data	
Night-time power loss = standby consumption	12 W
European Efficiency (245 / 620 / 870 V_{DC})	97.28% / 98.29% / 97.72%
Maximum efficiency	98.55%
Protective class	1
EMC emission class	B

General data	
Pollution degree	3
Permitted ambient temperature	-40 °C to +60 °C
Permitted storage temperature	-40 °C to +70 °C
Relative humidity	0–100%
Sound pressure level	56.5 dB(A) (ref. 20 µPA)
Ingress protection rating	IP66
Dimensions (height × width × depth)	730 × 540 × 278 mm
Weight	35.2 kg
Weight with packaging	41.8 kg
Inverter topology	Non-insulated, transformerless

Verto 20.0

Input data	
Maximum input voltage (at 1000 W/m² / -10 °C in an open circuit)	1000 V_{DC}
Start-up input voltage	150 V_{DC}
MPP voltage range	275–870 V_{DC}
Number of MPP controllers	3
Maximum total input current ($I_{DC\ max}$) PV1 / PV2 / PV3 per string	75 A 28 / 28 / 28 A 28 A
Max. total short circuit current [8] PV1 / PV2 / PV3 per string	100 A 50 / 50 / 50 A 50 A
Maximum total array power ($P_{PV\ max}$) PV1 / PV2 / PV3	30 kWp 20 / 20 / 20 kWp
DC overvoltage category	2
Max. inverter backfeed current to the array [3]	50 A[4]
Max. capacity of the PV generator against earth	5400 nF
Limit value of the insulation resistance test between module array and ground (on delivery) [7]	100 kΩ
Adjustable range of the insulation resistance test between module array and ground [6]	10–10,000 kΩ
Limit value and trip time of sudden residual current monitoring (on delivery)	30 / 300 mA / ms 60 / 150 mA / ms 90 / 40 mA / ms
Limit value and trip time of continuous residual current monitoring (on delivery)	300 / 300 mA / ms
Adjustable range of continuous residual current monitoring [6]	30–300 mA
Cyclical repetition of insulation resistance test (on delivery)	24 h
Adjustable range for cyclical repetition of insulation resistance test	-

Output data	
Grid voltage range	176–528 V_{AC}
Rated grid voltage	220 | 230 V_{AC}[1]

Output data	
Rated power	20 kW
Rated apparent power	20 kVA
Rated frequency	50 / 60 Hz [1)]
Maximum output current/phase	38.5 A
Power factor (cos phi)	0-1 ind./cap.[2)]
Grid connection	3~ (N)PE 380 / 220 V_{AC} 3~ (N)PE 400 / 230 V_{AC} 3~ (N)PE 440 / 254 V_{AC} 3~ (N)PE 480 / 277 V_{AC}
Earthing systems	TT (allowed if U_{N_PE} < 30 V) TN-S (allowed) TN-C-S (allowed) IT (not allowed)
Maximum output power	20 kW
Rated power	20 kW
Rated output current/phase	30.3 / 29 / 26.2 / 24.1 A
Total harmonic distortion	< 3%
AC overvoltage category	3
Current (inrush) [5)]	24.72 A peak / 6.82 A rms over 1.99 ms [4)]
Max. output fault current/duration	33.8 A / 11.8 ms

General data	
Night-time power loss = standby consumption	12 W
European Efficiency (275 / 620 / 870 V_{DC})	97.41% / 98.33% / 97.80%
Maximum efficiency	98.56%
Protective class	1
EMC emission class	B
Pollution degree	3
Permitted ambient temperature	-40 °C to +60 °C
Permitted storage temperature	-40 °C to +70 °C
Relative humidity	0–100%
Sound pressure level	56.5 dB(A) (ref. 20 µPA)
Ingress protection rating	IP66
Dimensions (height × width × depth)	730 × 540 × 278 mm
Weight	35.2 kg
Weight with packaging	41.8 kg
Inverter topology	Non-insulated, transformerless

Verto 24.0

Input data	
Maximum input voltage (at 1000 W/m² / -10 °C in an open circuit)	1000 V_{DC}
Start-up input voltage	150 V_{DC}

Input data	
MPP voltage range	355–870 V_{DC}
Number of MPP controllers	3
Maximum total input current ($I_{DC\ max}$) PV1 / PV2 / PV3 per string	75 A 28 / 28 / 28 A 28 A
Max. total short circuit current [8] PV1 / PV2 / PV3 per string	100 A 50 / 50 / 50 A 50 A
Maximum total array power ($P_{PV\ max}$) PV1 / PV2 / PV3	36 kWp 20 / 20 / 20 kWp
DC overvoltage category	2
Max. inverter backfeed current to the array [3]	50 A[4]
Max. capacity of the PV generator against earth	5400 nF
Limit value of the insulation resistance test between module array and ground (on delivery) [7]	100 kΩ
Adjustable range of the insulation resistance test between module array and ground [6]	10–10,000 kΩ
Limit value and trip time of sudden residual current monitoring (on delivery)	30 / 300 mA / ms 60 / 150 mA / ms 90 / 40 mA / ms
Limit value and trip time of continuous residual current monitoring (on delivery)	300 / 300 mA / ms
Adjustable range of continuous residual current monitoring [6]	30–300 mA
Cyclical repetition of insulation resistance test (on delivery)	24 h
Adjustable range for cyclical repetition of insulation resistance test	-

Output data	
Grid voltage range	176–528 V_{AC}
Rated grid voltage	220 | 230 V_{AC}[1]
Rated power	24 kW
Rated apparent power	24 kVA
Rated frequency	50 / 60 Hz [1]
Maximum output current/phase	38.5 A
Power factor (cos phi)	0-1 ind./cap.[2]
Grid connection	3~ (N)PE 380 / 220 V_{AC} 3~ (N)PE 400 / 230 V_{AC} 3~ (N)PE 440 / 254 V_{AC} 3~ (N)PE 480 / 277 V_{AC}
Earthing systems	TT (allowed if U_{N_PE} < 30 V) TN-S (allowed) TN-C-S (allowed) IT (not allowed)
Maximum output power	24 kW
Rated power	24 kW
Rated output current/phase	36.4 / 34.8 / 31.5 / 28.9 A
Total harmonic distortion	< 3%
AC overvoltage category	3

Output data	
Current (inrush) [5]	24.72 A peak / 6.82 A rms over 1.99 ms [4]
Max. output fault current/duration	33.8 A / 11.8 ms

General data	
Night-time power loss = standby consumption	12 W
European Efficiency (335 / 620 / 870 V_{DC})	97.62% / 98.35% / 97.93%
Maximum efficiency	98.54%
Protective class	1
EMC emission class	B
Pollution degree	3
Permitted ambient temperature	-40 °C to +60 °C
Permitted storage temperature	-40 °C to +70 °C
Relative humidity	0–100%
Sound pressure level	56.5 dB(A) (ref. 20 µPA)
Ingress protection rating	IP66
Dimensions (height × width × depth)	730 × 540 × 278 mm
Weight	35.2 kg
Weight with packaging	41.8 kg
Inverter topology	Non-insulated, transformerless

Verto 25.0 400

Input data	
Maximum input voltage (at 1000 W/m² / -10 °C in an open circuit)	1000 V_{DC}
Start-up input voltage	150 V_{DC}
MPP voltage range	350–870 V_{DC}
Number of MPP controllers	3
Maximum total input current ($I_{DC\ max}$) PV1 / PV2 / PV3 per string	75 A 28 / 28 / 28 A 28 A
Max. total short circuit current [8] PV1 / PV2 / PV3 per string	100 A 50 / 50 / 50 A 50 A
Maximum total array power ($P_{PV\ max}$) PV1 / PV2 / PV3	37.5 kWp 20 / 20 / 20 kWp
DC overvoltage category	2
Max. inverter backfeed current to the array [3]	50 A[4]
Max. capacity of the PV generator against earth	5400 nF
Limit value of the insulation resistance test between module array and ground (on delivery) [7]	100 kΩ
Adjustable range of the insulation resistance test between module array and ground [6]	10–10,000 kΩ
Limit value and trip time of sudden residual current monitoring (on delivery)	30 / 300 mA / ms 60 / 150 mA / ms 90 / 40 mA / ms

Input data	
Limit value and trip time of continuous residual current monitoring (on delivery)	300 / 300 mA / ms
Adjustable range of continuous residual current monitoring 6)	30–300 mA
Cyclical repetition of insulation resistance test (on delivery)	24 h
Adjustable range for cyclical repetition of insulation resistance test	-

Output data	
Grid voltage range	176–528 V_{AC}
Rated grid voltage	230 V_{AC} 1)
Rated power	25 kW
Rated apparent power	25 kVA
Rated frequency	50/60 Hz 1)
Maximum output current/phase	38.5 A
Power factor (cos phi)	0-1 ind./cap. 2)
Grid connection	3~ (N)PE 400 / 230 V_{AC}
Earthing systems	TT (allowed if U_{N_PE} < 30 V) TN-S (allowed) TN-C-S (allowed) IT (not allowed)
Maximum output power	25 kW
Rated power	25 kW
Rated output current/phase	36.1 / 32.8 / 30.1 A
Total harmonic distortion	< 3%
AC overvoltage category	3
Current (inrush) 5)	24.72 A peak / 6.82 A rms over 1.99 ms 4)
Max. output fault current/duration	33.8 A / 11.8 ms

General data	
Night-time power loss = standby consumption	12 W
European Efficiency (350 / 620 / 870 V_{DC})	97.67% / 98.35% / 97.98%
Maximum efficiency	98.56%
Protective class	1
EMC emission class	B
Pollution degree	3
Permitted ambient temperature	-40 °C to +60 °C
Permitted storage temperature	-40 °C to +70 °C
Relative humidity	0–100%
Sound pressure level	56.5 dB(A) (ref. 20 µPA)
Ingress protection rating	IP66
Dimensions (height × width × depth)	730 × 540 × 278 mm
Weight	35.2 kg
Weight with packaging	41.8 kg
Inverter topology	Non-insulated, transformerless

Protection devices

DC disconnector	Integrated
Cooling principle	Controlled forced-air ventilation
RCMU [9]	Integrated
RCMU classification	The software class of the safety platform(s) is defined as a class B control function (single-channel with periodic self-test) in accordance with IEC 60730 Annex H.
DC isolation measurement [9]	integrated [2]
Overload performance	Operating point shift Power limitation
Active anti-islanding method	Frequency point shift method
AFCI	optional
AFPE (AFCI) classification (according to IEC 63027) [9]	F-I-AFPE-2-4/2-2 Full coverage Integrated AFPE 2 monitored strings per input port 4/2 input ports per channel (AFPE1 for MPP1 & MPP2: 4, AFPE2 for MPP3: 2) 2 monitored channels

WLAN

Frequency range	2412 - 2462 MHz
Channels / power used	Channel: 1-11 b,g,n HT20 Channel: 3-9 HT40 <18 dBm
Modulation	802.11b: DSSS (1Mbps DBPSK, 2Mbps DQPSK, 5.5/11Mbps CCK) 802.11g: OFDM (6/9Mbps BPSK, 12/18Mbps QPSK, 24/36Mbps 16-QAM, 48/54Mbps 64-QAM) 802.11n: OFDM (6.5 BPSK, QPSK, 16-QAM, 64-QAM)

Data communication

WiFi SMA-RP connection (**FCC ID:** QKWPILOT1 / **IC ID:** 12270A-PILOT1)	802.11b/g/n (WPA, WPA2) Frequency: 2.4 GHz
Ethernet (LAN)	RJ 45, 10/100 Mbit
Wired shutdown (WSD)	Max. 28 devices/WSD chain Max. distance between two devices = 100 m
Modbus RTU SunSpec (2x)	RS485 2-wire
Battery connection (only for Verto Plus devices)	Modbus O / RJ 45 / 12 V power supply
Voltage level of digital inputs	Low: min. 0 V-max. 1.8 V High: min. 4.5 V-max. 28.8 V
Input currents of digital inputs	depending on the input voltage; input resistance = 70 kOhm

Total power for digital output (with internal supply)	6 W at 12 V
Power per digital output (with external supply)	1 A at >12.5 V - 24 V (max. 3 A in total)
Datalogger/web server	Integrated

Surge protection device DC SPD type 2

General data	
Continuous operating current (I_{cpv})	< 0.1 mA
Rated discharge current (I_n) - 15 x 8/20 µs pulses	20 kA
Protection level (U_p) (star-shaped mounting)	3.6 kV
Short circuit strength PV (I_{scpv})	15 kA

Disconnector	
Thermal disconnector	Integrated
External fuse	None

Mechanical properties	
Disconnection indicator	Mechanical indicator (red)
Remote communication of the connection interruption	Output on the changeover contact
Housing material	Thermoplastic UL-94-V0
Test standards	IEC 61643-31 / EN 61643-31

Explanation of footnotes

1) The values stated are defaults; the inverter is configured specifically to suit the requirements of the relevant country.
2) Depending on the country setup or device-specific settings (ind. = inductive; cap. = capacitive).
3) Maximum current from a defective PV module to all other PV modules. From the inverter itself to the PV side of the inverter, it is 0 A.
4) Guaranteed by the electrical configuration of the inverter.
5) Current peak when switching on the inverter.
6) Specified values are standard values; depending on the requirement and PV power, these values must be adjusted accordingly.
7) Specified value is a max. value; exceeding the max. value may negatively affect the function.
8) $I_{SC\ PV} = I_{CP\ PV} \geq I_{SC\ max} = I_{SC}$ (STC) x 1.25 according to e.g., IEC 60364-7-712, NEC 2020, AS/NZS 5033:2021
9) Software class B (single channel with periodic self-test) control function according to IEC60730-1 Annex H.

Integrated DC disconnector

General data	
Product name	Benedict LSA32 E 8237
Rated insulation voltage	1000 V_{DC}
Rated impulse withstand voltage	8 kV
Suitability for insulation	Yes, DC only
Utilization category and/or PV utilization category	according to IEC/EN 60947-3 utilization category DC-PV2
Rated short-time withstand current (I_{cw})	Rated short-time withstand current (I_{cw}): 1000 A
Rated short-circuit capacity (I_{cm})	Rated short-circuit capacity (I_{cm}): 1000 A

Rated operating current and rated breaking capacity				
Rated operating voltage (U_e)	Rated operating current (I_e)	$I_{(make)}$ / $I_{(break)}$	Rated operating current (I_e)	$I_{(make)}$ / $I_{(break)}$
≤ 500 V_{DC}	14 A	56 A	28 A	112 A
600 V_{DC}	11.5 A	46 A	28 A	112 A
700 V_{DC}	7.5 A	30 A	28 A	112 A
800 V_{DC}	5.75 A	23 A	23 A	92 A
900 V_{DC}	4.75 A	19 A	20 A	80 A
1000 V_{DC}	4 A	16 A	13 A	52 A
Number of pins	1	1	2	2

fronius.com/en/solar-energy/installers-partners/products-solutions/monitoring-digital-tools

MONITORING &
DIGITAL TOOLS

Fronius International GmbH
Froniusstraße 1
4643 Pettenbach
Austria
contact@fronius.com
www.fronius.com

At www.fronius.com/contact you will find the contact details of all Fronius subsidiaries and Sales & Service Partners.