How to set up Export Limiting
Using the Fronius Smart Meter*

*Single phase or 3-phase Energy Meter

Application Guide

Version 4.0/2020

1. GENERAL

So called “export limiting” is where the Utility or network operator restricts the amount of energy from PV system that goes into the grid. I.e. excess energy that is not consumed on the site. In order for the end user to gain the maximum amount of energy from the system without exceeding the export limit, the inverter output needs to be able to follow the site load.

With Fronius Datamanager 2.0 integrated SnapINverter and GEN24 inverter it is possible to limit the inverter output power dynamically and therefore to control and limit the amount of energy which is exported into the grid in accordance to the consumption of the loads.

The Datamanager Card 2.0 and the GEN24 inverter offer the following options to control the power output of the inverter:

- Modbus RTU
- Modbus TCP
- digital inputs
- Dynamic Power Reduction using the Fronius Smart Meter

Therefore there are two possible ways to achieve export limiting with Fronius Inverters:

- Using the Fronius Smart Meter to allow the inbuilt Dynamic Power Reduction.
- 3rd party controller issuing commands to the inverter.

The simplest and most cost effective way to achieve export control with Fronius inverters is to use the Fronius Smart Meter. The meter measures the amount of energy imported to or exported from the grid and the Datamanager 2.0/GEN24 uses these values to calculate the appropriate output power of the inverter to limit the export to the grid.

This document describes how to set up export control using the single phase or 3-phase Fronius Smart Meter.

1.1 Location of the Fronius Smart Meter

With the Fronius Smart Meter there are 2 possible energy paths / locations where it can be installed.
The **feed-in point** or the **consumption path.**

Feed-in point – bi-directional energy measurement possible. Feed-in of surplus energy/consumption from the grid is measured.
Consumption path – single direction energy measurement. Load is measured directly.

Due to NET metering and the common way installations are done in some countries, in almost all cases, the Fronius Smart Meter will be installed at the **feed-in point**. This is also the default setting on the inverter WebInterface.

/ Feed-in point
In this position the solar & the loads are in parallel. The solar is connected to the “load” side of the Fronius Smart Meter.

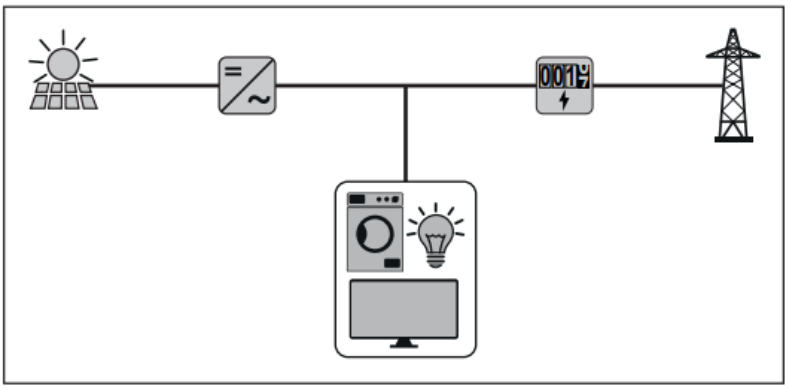

/ Consumption path
In this position the solar & the loads are separated by the meter. The solar is connected to the “grid” side of the Fronius Smart Meter.

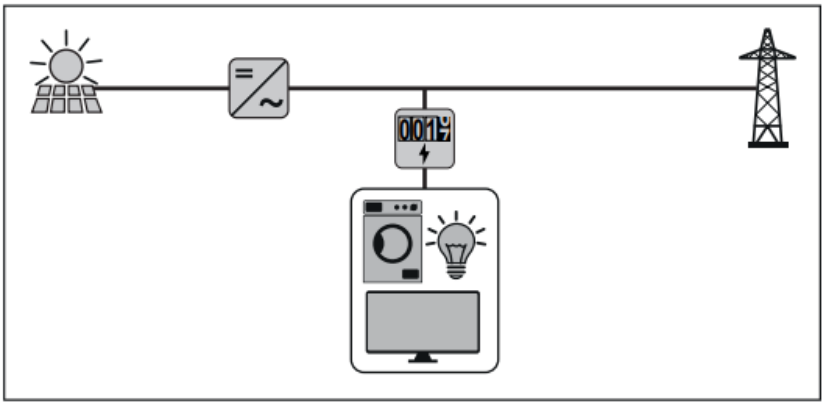

1.2 Requirements

Important! The Fronius Datamanager 2.0 needs a software version of **3.16.x-x** or greater. It can be downloaded from the Fronius Website under *Solar Energy / Info center / installer support* or click here: https://www.fronius.com/en/photovoltaics/infocentre/tech-support?

Within the *Installer Support Area* on the Fronius Website you can also find a more detailed document/guide on how to update your Datamanager 2.0.

2. EXPORT CONTROL USING A FRONIUS SMART METER

2.1 Smart Meter type overview

Fronius Smart Meters or the Fronius Smart Meters TS (single phase or 3-phase) are energy meters with ModBus RTU / RS 485 communication. It is needed for measuring the load and energy fed into the grid.

The Smart Meter needs to be connected to the Fronius inverter. If a SnapINverter is used a Fronius Datamanager 2.0 is necessary. This communication card comes built-in in SnapINverters Galvo, Primo, Symo and Eco and can be retrofitted to all other Fronius inverters.

Fronius Smart Meter 63A-3

Fronius Smart Meter 63A-1

Fronius Smart Meter 50kA-3

Fronius Smart Meter TS 65A-3

Fronius Smart Meter TS 100A-1

Fronius Smart Meter TS 5kA-3

2.2 Schematics and Wiring

The following schematics shows the system configuration

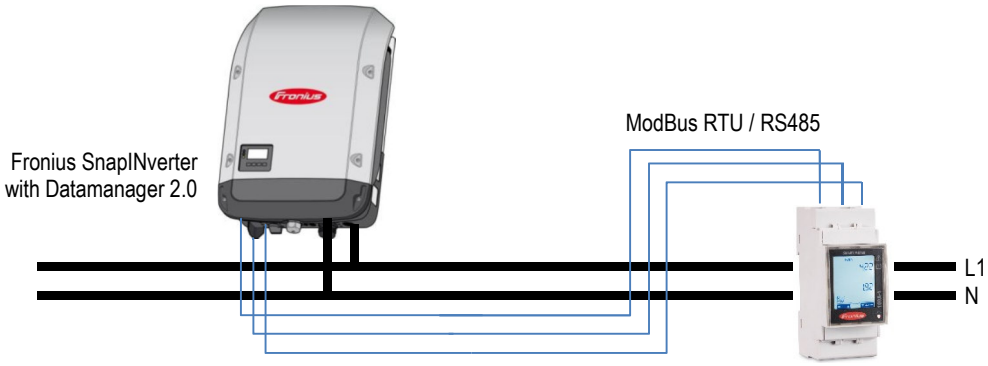

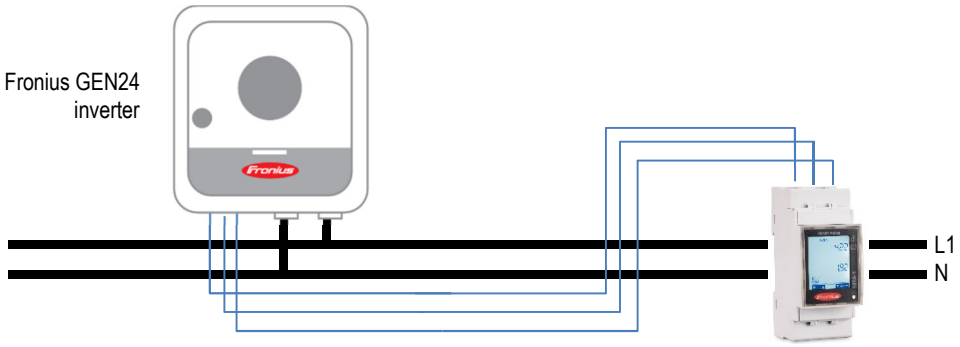

Fronius Smart Meter

Please note:
/ Cables of type CAT5 or a higher maybe used for data wiring between Meter and inverter.
/ Use a shielded twisted pair cable and connect the shield to ground on one side to avoid interference.
/ Use twisted cable pair for the data lines (D+ and D- or M1+ and M1-)
/ Maximum distance: 300 m (980 feet)

Meter connection on the inverter
The meter needs to be connected to the terminal block on the Datamanager 2.0/within the GEN24 inverter.

Datamanager 2.0

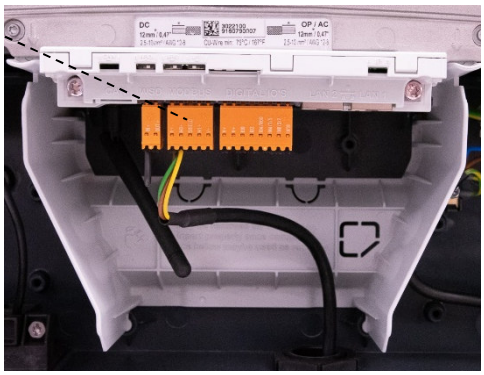

GEN24 – connection on the communication card

Wiring detail for Single Phase Fronius Smart Meter 63A-1

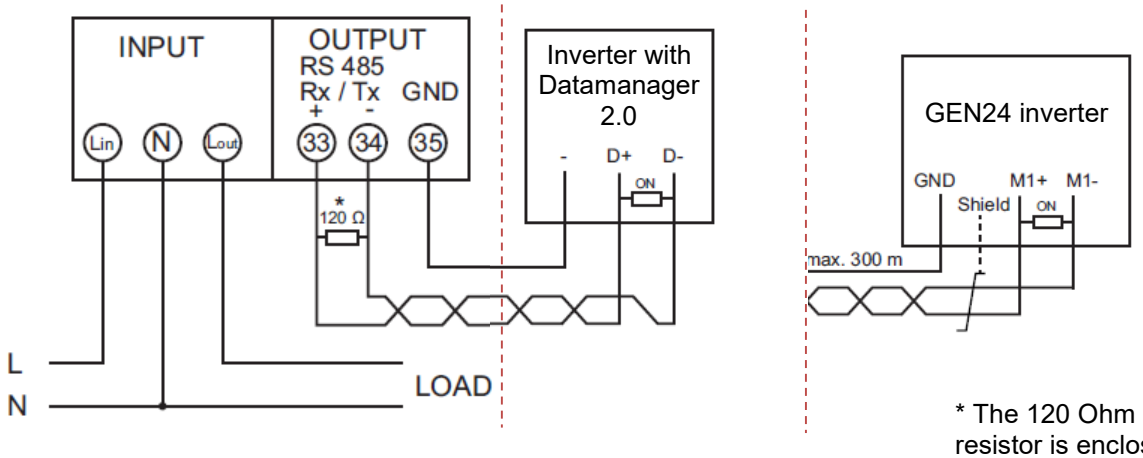

* The 120 Ohm terminating resistor is enclosed with the meter

Wiring detail for Single Phase Fronius Smart Meter TS 100A-1

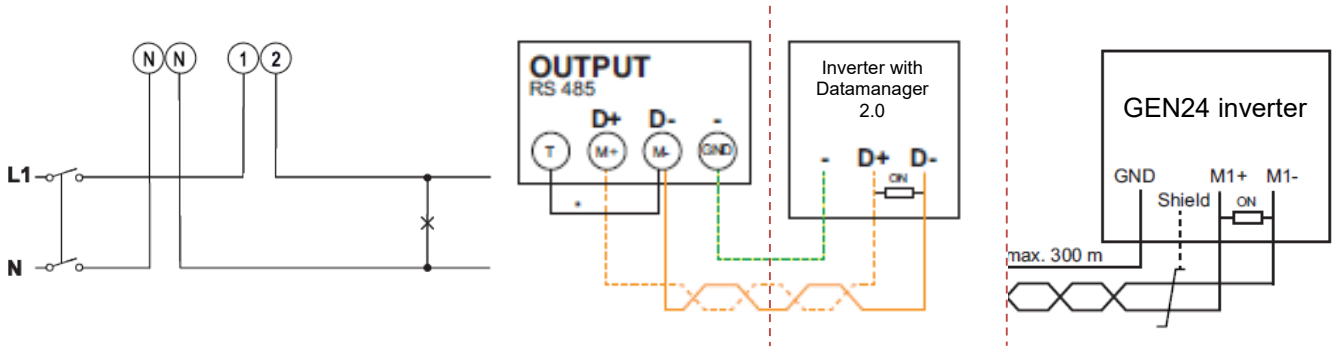

Contact “T”: 120 Ohm terminating resistor has to be bridged at the end of the Modbus line.

Wiring detail for 3-Phase Fronius Smart Meter 63A-3

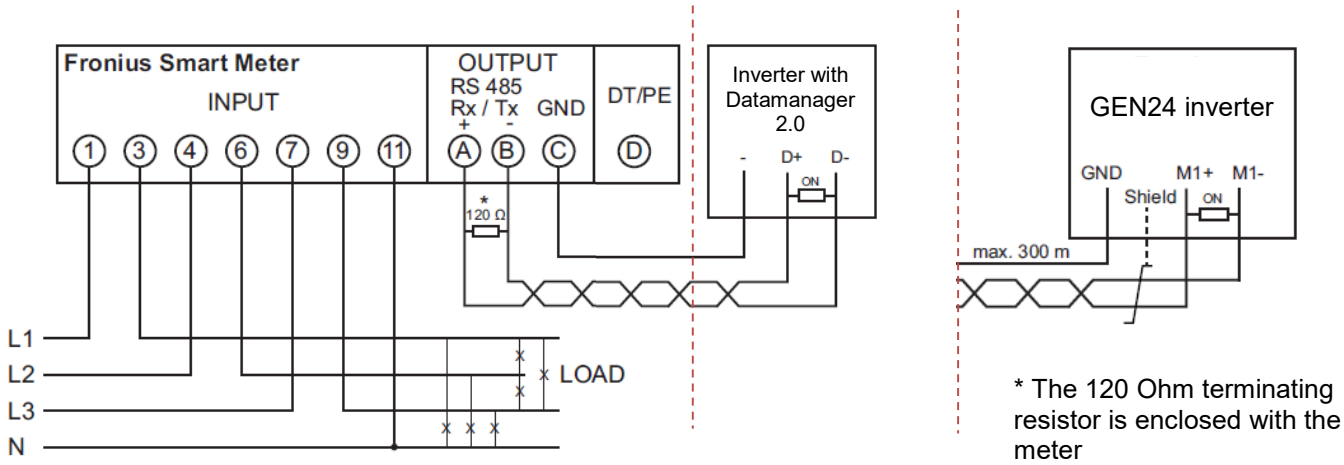

* The 120 Ohm terminating resistor is enclosed with the meter

Wiring detail for 3-Phase Fronius Smart Meter TS 65A-3

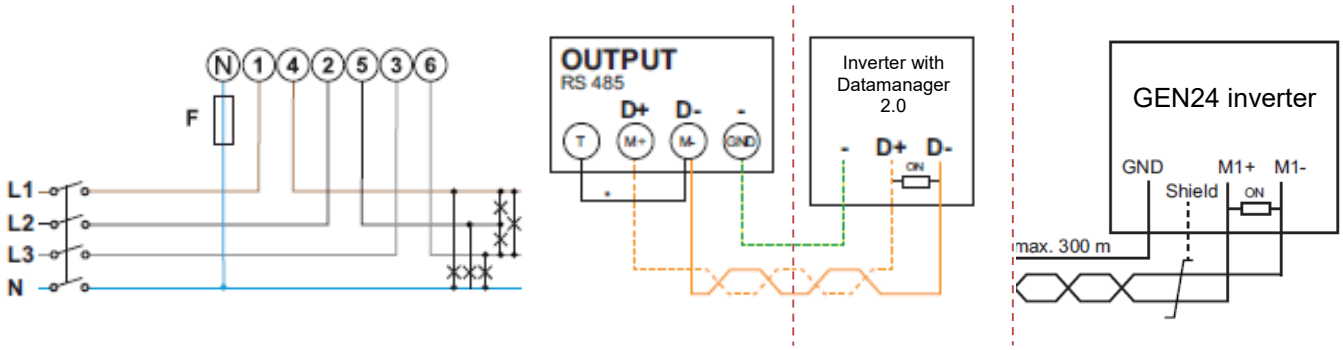

Contact T: 120 Ohm terminating resistor has to be bridged at the end of the Modbus line.

Wiring detail for 3-Phase Fronius Smart Meter 50kA-3

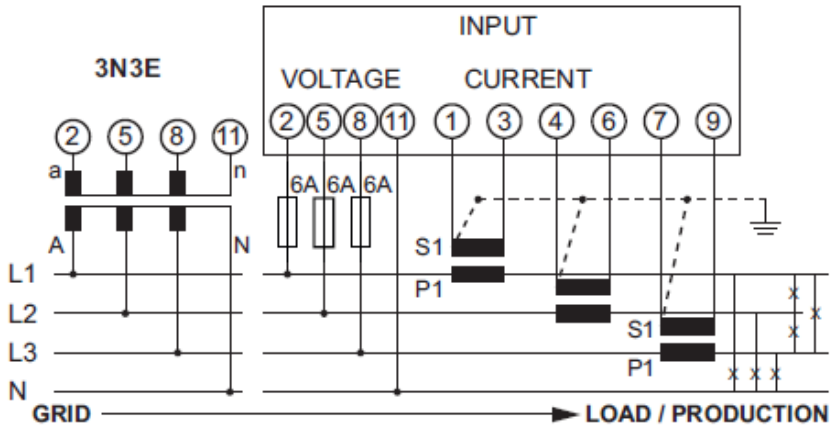

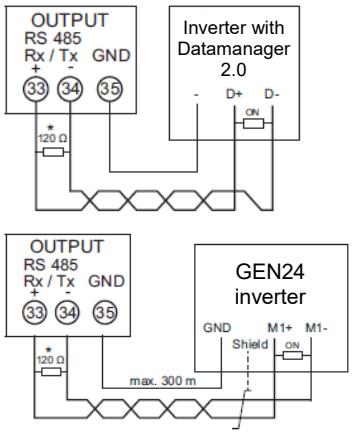

* The 120 Ohm terminating resistor is enclosed with the meter

Wiring detail for 3-Phase Fronius Smart Meter TS 5kA-3

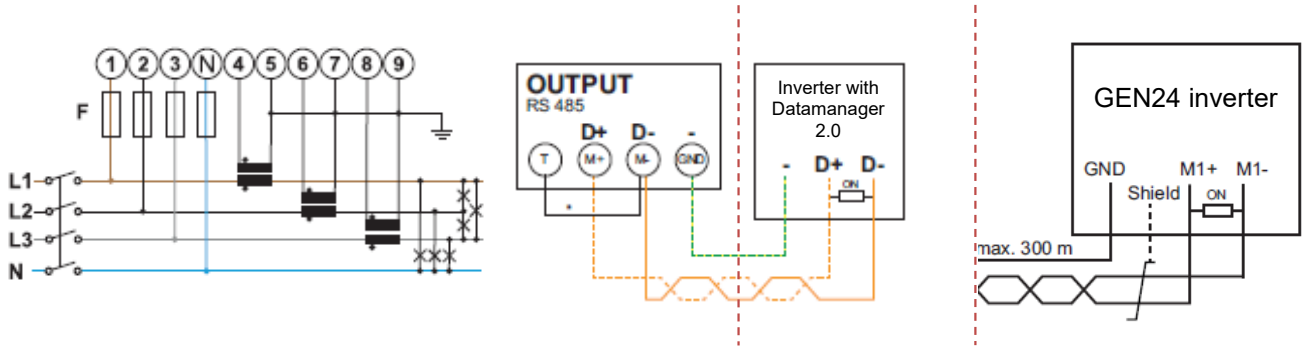

Contact T: 120 Ohm terminating resistor has to be bridged at the end of the Modbus line.

Modbus termination on the inverter

The internal bus termination 120-Ohm resistance (for Modbus RTU) must be switched *ON* at the first and last device in an RS-485 bus connection.

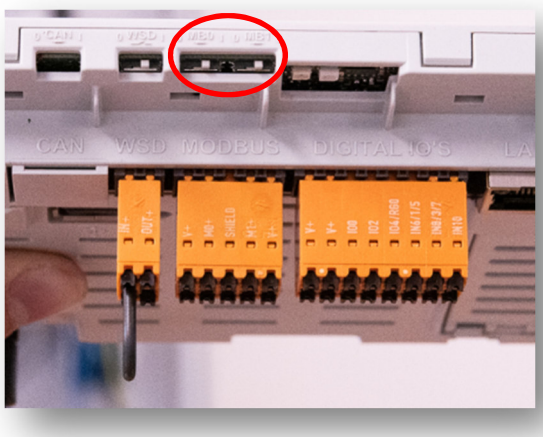

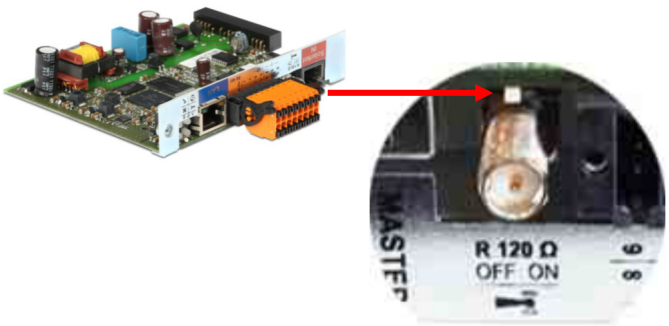

CT ratio programming on the Fronius Smart Meter 50kA-3

Only the transmission ratio has to be set!

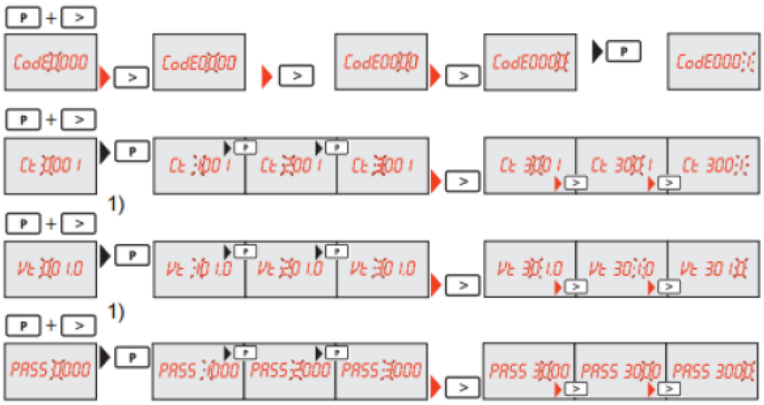

Password / type in Code **0001**

transmission ratio of the current transducer *)

transmission ratio of the voltage transducer – not in use.

Change password – 0001
For future changes of the CT, please don't change the password, there is no possibility to read the set password

*) ratio **Primary nominal current** / **secondary nominal current**
Example:
Primary nominal current 100 A / secondary nominal current 5 A = Transmission ratio 20
Primary nominal current 200 A / secondary nominal current 5 A = Transmission ratio 40

E.g. If your CT ratio is 20 you need to set "Ct 0020"

CT ratio programming on the Fronius Smart Meter TS 5kA-3

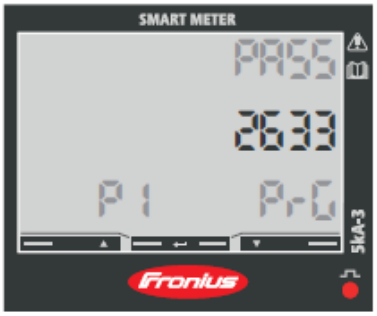

(1) Press and hold "Enter" for 2 seconds long.
(2) Go to Page P1 with "Up" or "Down" buttons.
(3) Enter the password "2633" with "Up" and "Down" and confirm every single value with "Enter".
(4) Note the password.

Important! Password can not be reset.

(1) Go to Page P4 with "Up" or "Down" buttons.
(2) Press and hold "Enter" for 2 seconds long.
(3) Set the correct Ct ratio and confirm every single value with "Enter".
(4) Go to Page P18 with "Up". Press and hold "Enter" for 2 seconds long to save and leave the settings.

2.3 Activating the Fronius Smart Meter on the inverter

2.3.1 Meter activation on the Datamanager 2.0 Web interface

The Datamanager Web interface can be accessed in two ways:

1. Via the Wi-Fi Access Point:
   - Activate the Wi-Fi Access Point on the Datamanager card (inverter) or Datamanager Box 2.0
   - Connect your computer/table/smart phone to the ,,**Fronius_240.XXXXXX"** Wi-Fi network
   - Open a web browser and go to http://192.168.250.181.

2. Via the LAN Port:
   - Connect your computer to the Datamanager via LAN cable
   - Switch the Datamanager IP Switch to Position 'A'
   - Open a web browser and go to http://169.254.0.180

For information of how to set up the Fronius Datamanager please see the manual of the Fronius inverter or the Fronius Datamanager (for Fronius Galvo/Symo/Primo/Eco):
http://www.fronius.com/cps/rde/xbcr/SID-791F3201-8338B17C/fronius_international/42_0426_0191_EA_388899_snapshot.pdf

Before it is possible to enter the *METER* settings a service password is required. If no service password has been set, it needs to be created first!

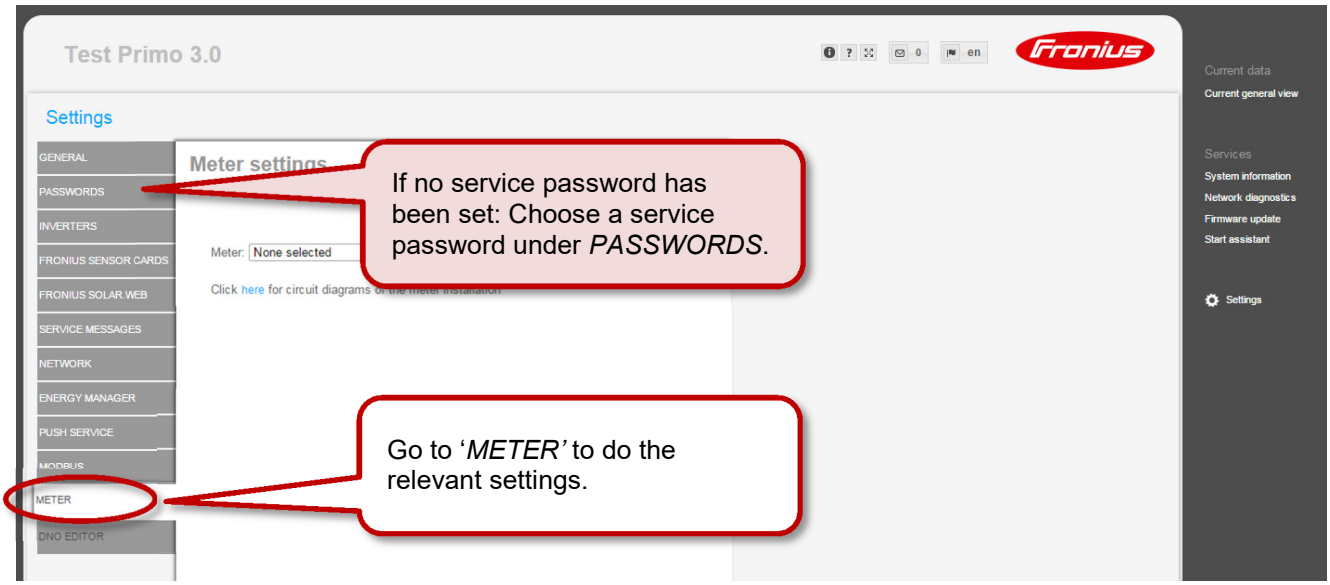

Choose the type of meter.

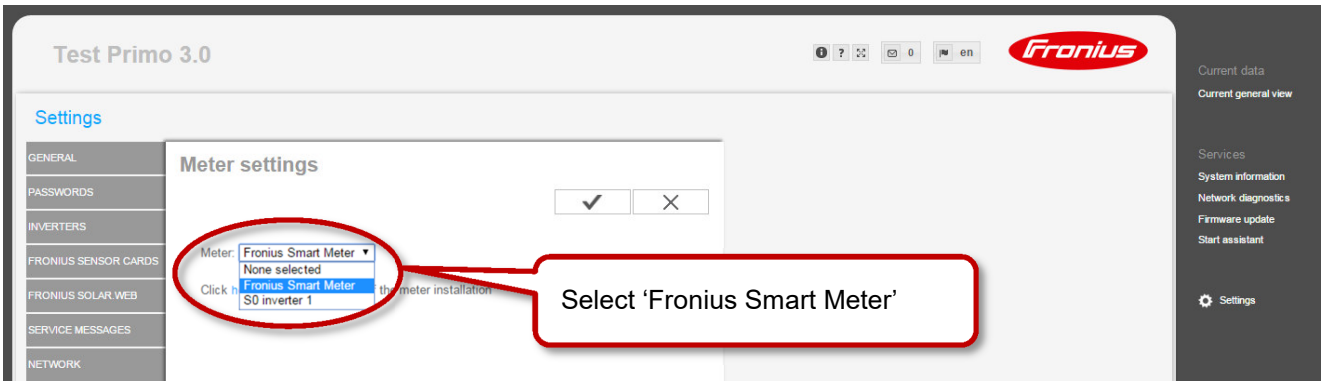

Choose location.
For further explanations on feed-in point and consumption path see chapter *1.1 Location of the energy meter*

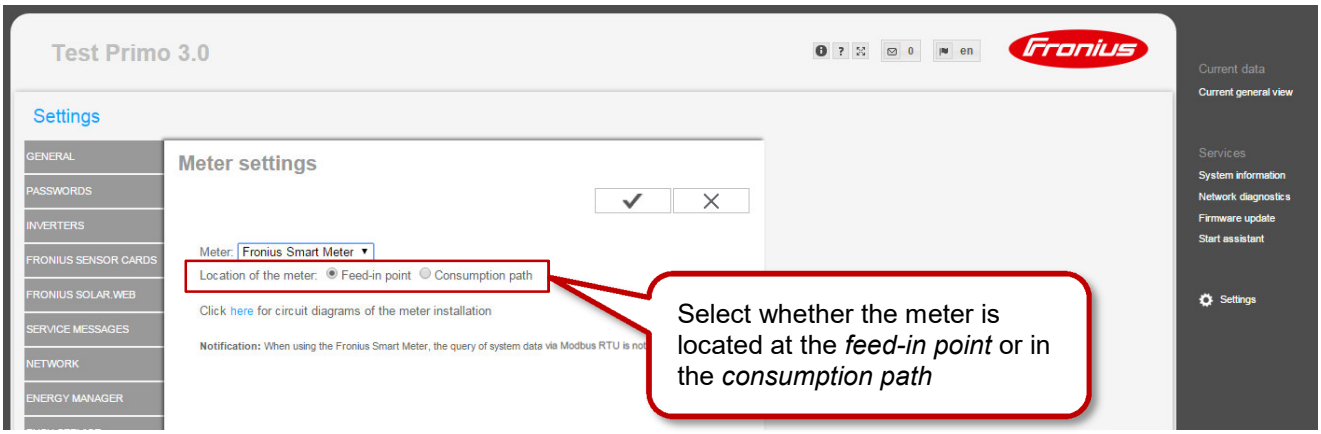

The meter is activated once you get the following message.

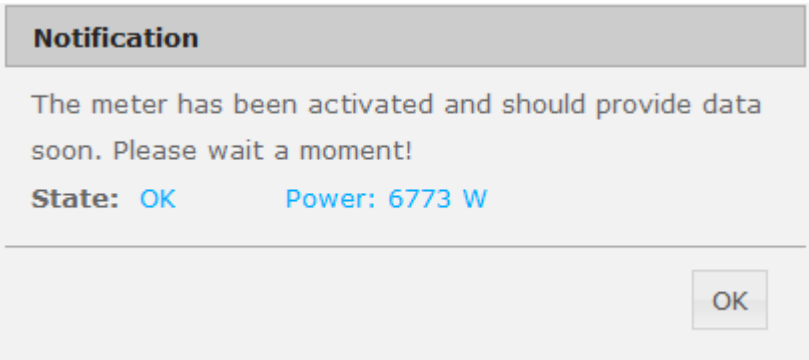

2.3.2 Activation on the GEN24 Web interface

The Web interface of GEN24 inverters can be accessed in two ways:

1. Via the Wi-Fi Access Point:
   - Open access point with one quick push on the inverter
   - Connect to the inverter network
     - Name: FRONIUS_Pilot serial number
     - Password: **12345678**
   - Enter IP-adress **192.168.250.181** into the address bar of your browser

2. Via the LAN Port:
   - Connect to inverter via network cable
     - Use LAN 1 - interface on the pilot
   - Enter IP-adress **169.254.0.180** into the address bar of your browser

Entering the Dashboard you have to unlock the submenus with the Technician password if you haven't done this in the commissioning yet.

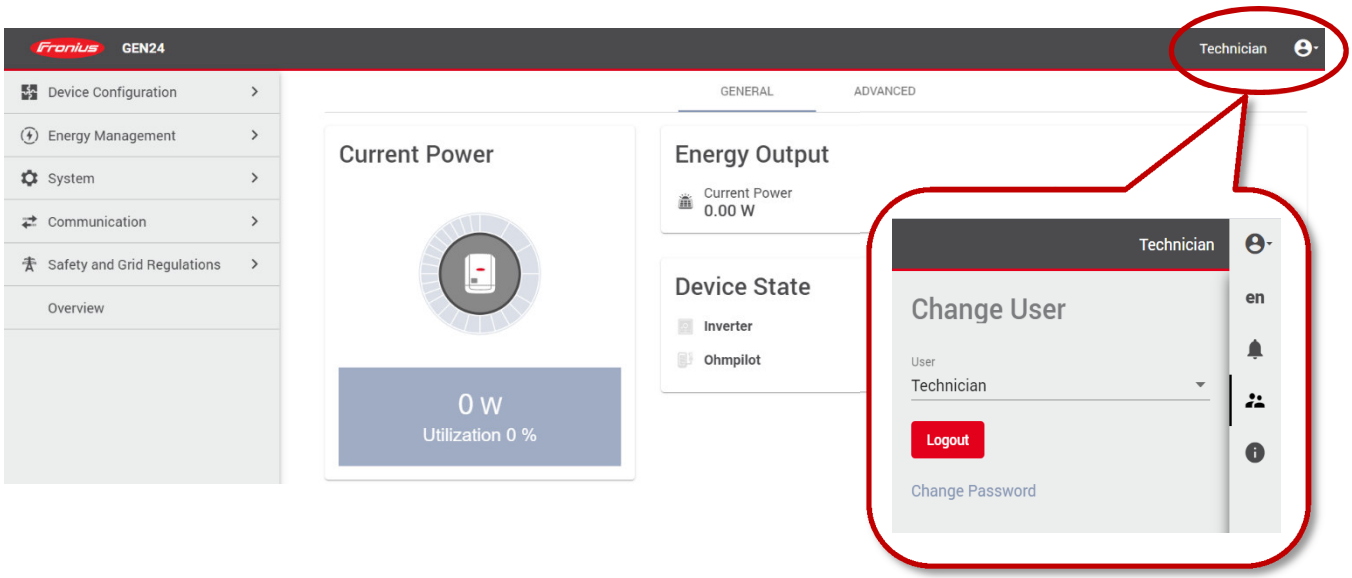

Enter the Submenu "Device Configuration" and go to "Components". There you are able to "add a component".

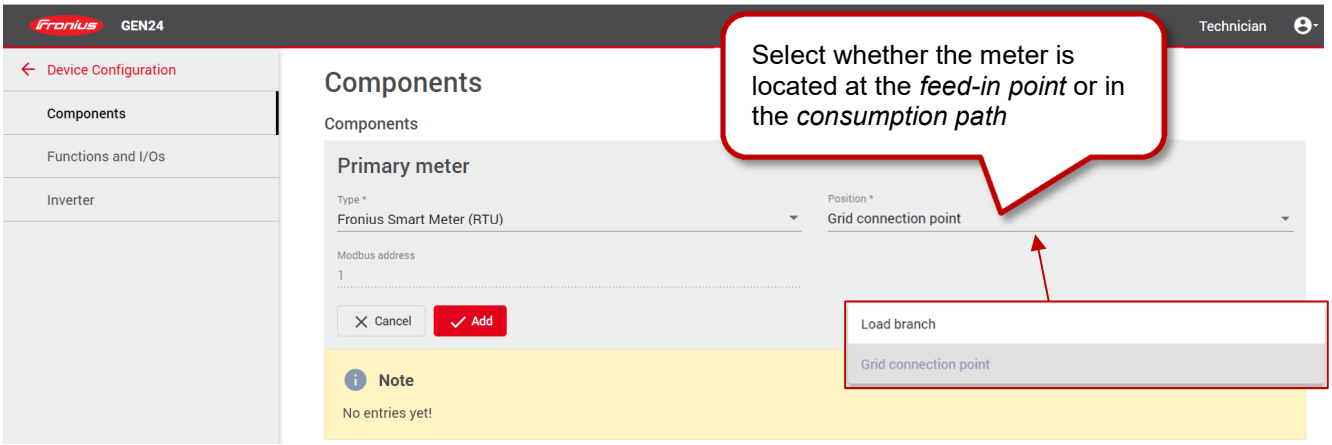

2.4 Set up Limit Export on the inverter

2.4.1 Set up Limit Export on Datamanager 2.0

Dynamic power reduction has the capability to control the inverter's output power according to the site's load and the export limitation. The export limit can be set on the web interface of the Fronius Datamanager as shown in the following picture.

Go to the tab '*DNO EDITOR'* under the Datamanager's settings.

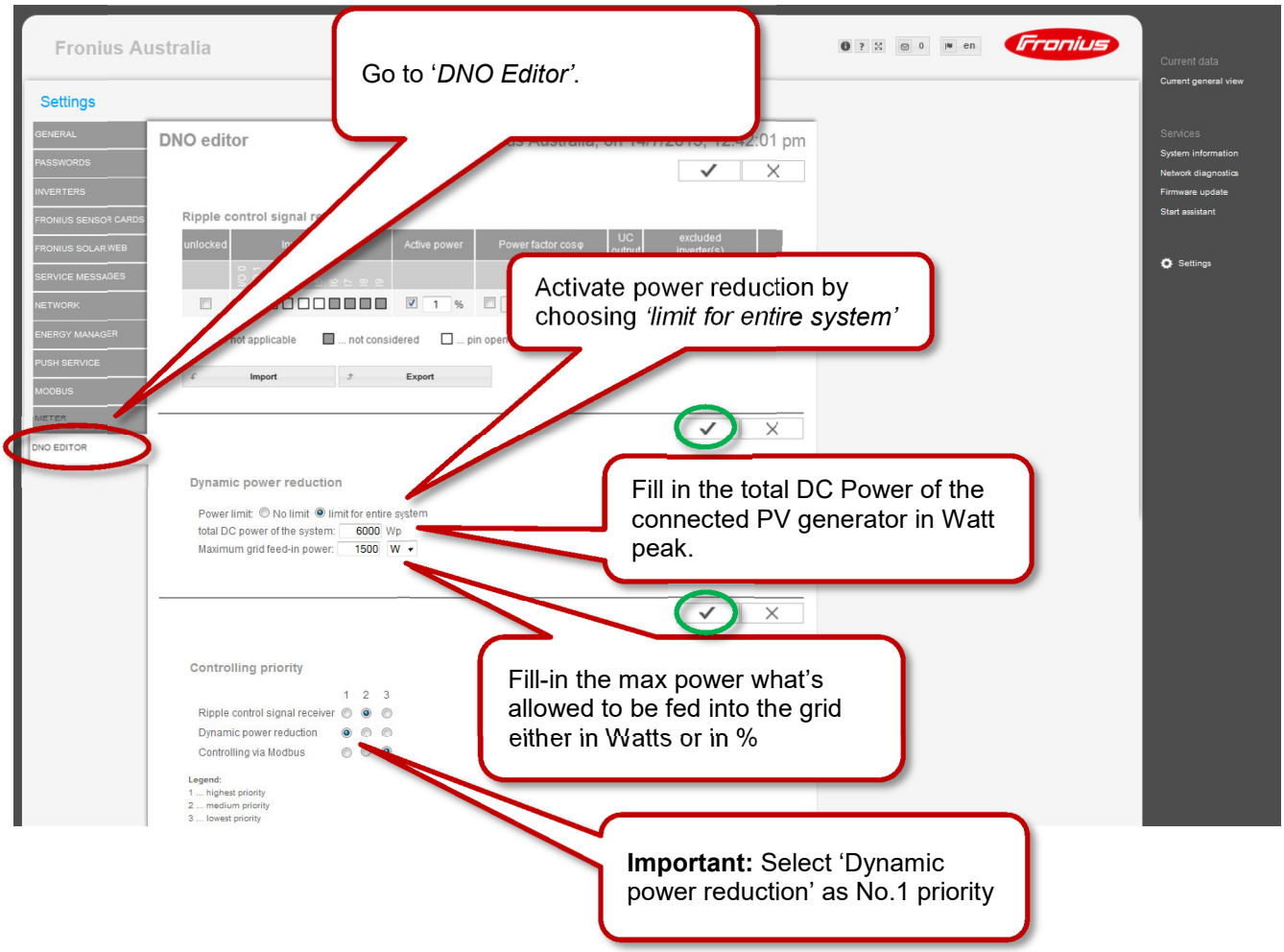

Once you **saved** your settings by selecting the ✓ in the Dynamic power reduction field, the set-up of the export limit is completed.
If the system comprises multiple inverters, all inverters which are connected in the SolarNet ring to the Datamanager will be equally power limited to achieve the set output limit.

2.4.2 Set up Limit Export on GEN24 inverter

Entering the Dashboard you have to unlock the submenus with the Technician password if you haven't done this in the commissioning yet.

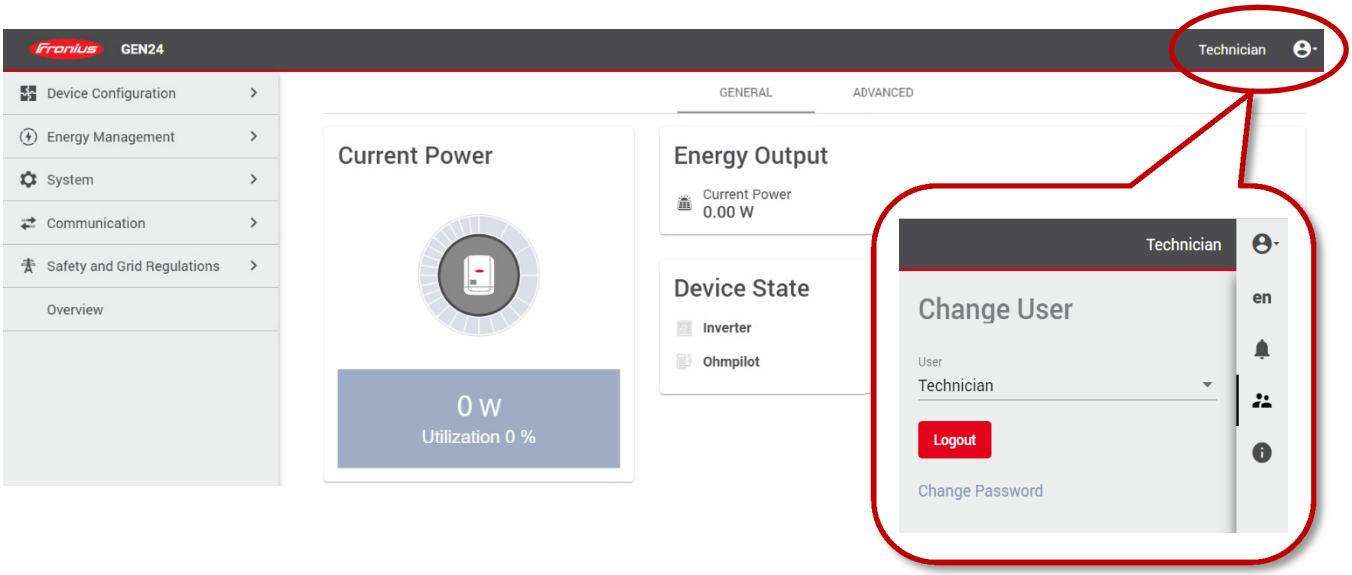

Enter the submenu "Safety and Grid Regulations"

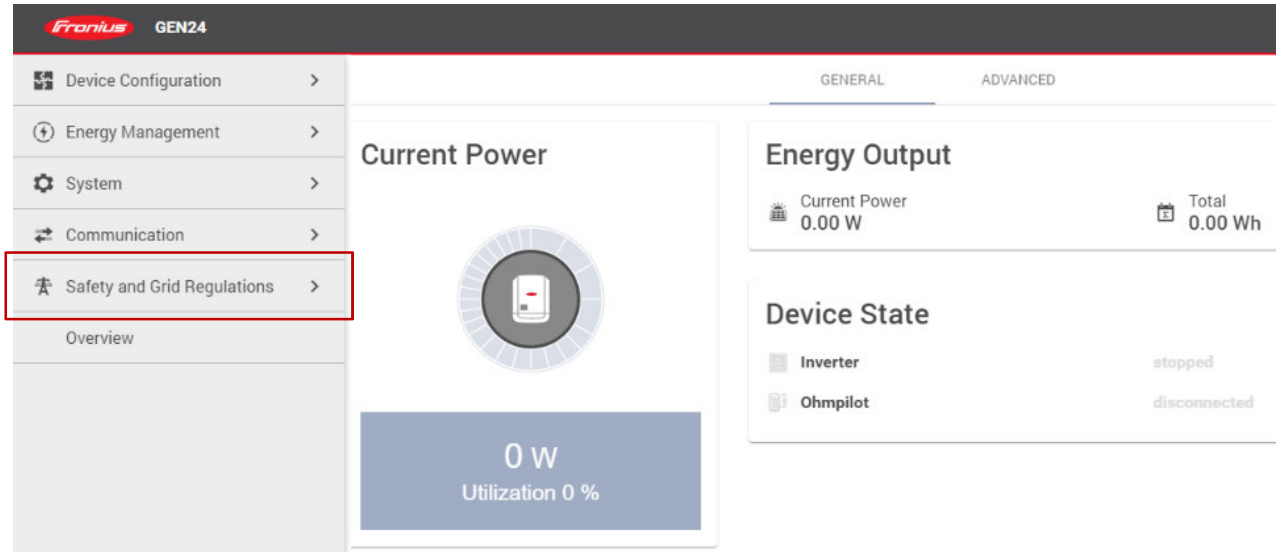

Enter "Export Limitation" and set the parameters "Total DC power of the entire system" and "maximum allowed feed-in power of the inverter" in % or Watt.